문의 사항은 www.admt.kr 로 연락 부탁 드리겠습니다.

ACR3 installation and user's guide

Document part number H-1000-5087-05-B



www.admt.kr

042-482-0621 / master@admt.kr

문의 사항은 www.admt.kr 로 연락 부탁 드리겠습니다.

ACR3 general information

© 2002 - 2025 Renishaw plc. All rights reserved.

ORIGINAL LANGUAGE VERSION

This document may not be copied or reproduced in whole or in part, or transferred to any other media or language by any means, without the prior written permission of Renishaw.

Disclaimer

WHILE CONSIDERABLE EFFORT WAS MADE TO VERIFY THE ACCURACY OF THIS DOCUMENT AT PUBLICATION, ALL WARRANTIES, CONDITIONS, REPRESENTATIONS AND LIABILITY, HOWSOEVER ARISING, ARE EXCLUDED TO THE EXTENT PERMITTED BY LAW.

RENISHAW RESERVES THE RIGHT TO MAKE CHANGES TO THIS DOCUMENT AND TO THE EQUIPMENT, AND/OR SOFTWARE AND THE SPECIFICATION DESCRIBED HEREIN WITHOUT OBLIGATION TO PROVIDE NOTICE OF SUCH CHANGES.

Trade marks

RENISHAW®, the probe symbol and REVO® are registered trade marks of Renishaw plc.

Renishaw product names, designations and the mark 'apply innovation' are trade marks of Renishaw plc or its subsidiaries.

Other brand, product or company names are trade marks of their respective owners.

WEEE



The use of this symbol on Renishaw products and / or accompanying documentation indicates that the product should not be mixed with general household waste upon disposal. It is the responsibility of the end user to dispose of this product at a designated collection point for waste electrical and electronic equipment (WEEE) to enable reuse or recycling. Correct disposal of this product will help to save valuable resources and prevent potential negative effects on the environment. For more information, please contact your local waste disposal service or Renishaw distributor.

Warranty

Unless you and Renishaw have agreed and signed a separate written agreement, the equipment and/or software are sold subject to the Renishaw Standard Terms and Conditions supplied with such equipment and/or software, or available on request from your local Renishaw office.

Renishaw warrants its equipment and software for a limited period (as set out in the Standard Terms and Conditions), provided that they are installed and used exactly as defined in associated Renishaw documentation. You should consult these Standard Terms and Conditions to find out the full details of your warranty.

Equipment and/or software purchased by you from a third-party supplier is subject to separate terms and conditions supplied with such equipment and/or software. You should contact your third-party supplier for details.

042-482-0621 / master@admt.kr

문의 사항은 www.admt.kr 로 연락 부탁 드리겠습니다.

Care of equipment

Renishaw probes and associated systems are precision tools used for obtaining precise measurements and must therefore be treated with care.

Changes to Renishaw products

Renishaw reserves the right to improve, change or modify its hardware or software without incurring any obligations to make changes to Renishaw equipment previously sold.

Company registration details

Renishaw plc. Registered in England and Wales. Company no: 1106260. Registered office: New Mills, Wotton-under-Edge, Gloucestershire, GL12 8JR, UK.

Packaging

To aid end user recycling and disposal the materials used in the different components of the packaging are stated here:

Packaging component	Material	94/62/EC code	94/62/EC number
Outer box	Cardboard - 70% recycled content	PAP	20
Packaging insert	Corrugated fibreboard	PAP	20
Packing foam	Polyurethane	PU	7
Bag	Low density polyethylene	LDPE	4

Patents

Features of Renishaw's ACR3 and associated products are the subjects of one or more of the following patents and patent applications:

EP1463604	US7722515

042-482-0621 / master@admt.kr

문의 사항은 www.admt.kr 로 연락 부탁 드리겠습니다.

ACR3 product compliance

EU declaration of conformity

Contact Renishaw plc or visit www.renishaw.com/EUCMM for the full EU declaration.

UK declaration of conformity

Contact Renishaw plc or visit www.renishaw.com/UKCMM for the full UK declaration.

EMC conformity

This equipment must be installed and used in accordance with this installation guide. This product is intended for industrial use only and should not be used in a residential area or connected to a low voltage power supply network which supplies buildings used for residential purposes.

FCC (USA only)

Information to user (47 CFR 15.105)

This equipment has been tested and found to comply with the limits for a Class A digital device, pursuant to Part 15 of the FCC rules. These limits are designed to provide reasonable protection against harmful interference when the equipment is operated in a commercial environment. This equipment generates, uses, and can radiate radio frequency energy and, if not installed and used in accordance with the instruction manual, may cause harmful interference to radio communications. Operation of this equipment in a residential area is likely to cause harmful interference, in which case you will be required to correct the interference at your own expense.

Information to user (47 CFR 15.21)

The user is cautioned that any changes or modifications not expressly approved by Renishaw plc or authorised representative could void the user's authority to operate the equipment.

Equipment label (47 CFR 15.19)

This device complies with part 15 of the FCC Rules. Operation is subject to the following two conditions:

1. This device may not cause harmful interference.
2. This device must accept any interference received, including interference that may cause undesired operation.

042-482-0621 / master@admt.kr

문의 사항은 www.admt.kr 로 연락 부탁 드리겠습니다.

ICES-001 (Canada only)

This ISM device complies with Canadian ICES-001(A) / NMB-001(A).

Cet appareil ISM est conforme à la norme ICES-001(A) / NMB-001(A) du Canada.

REACH regulation

Information required by Article 33(1) of Regulation (EC) No. 1907/2006 (“REACH”) relating to products containing substances of very high concern (SVHCs) is available at:

www.renishaw.com/REACH

China RoHS

Contact Renishaw plc or visit www.renishaw.com/ChinaRoHSCMM for the full China RoHS tabulation.



www.admt.kr

042-482-0621 / master@admt.kr

문의 사항은 www.admt.kr 로 연락 부탁 드리겠습니다.

ACR3 international safety instructions

BG - ПРЕДУПРЕЖДЕНИЕ

Моля, обърнете на приложение 1 и прочетете инструкциите за безопасност на вашия собствен език, преди за разопаковате и монтирате този продукт.

CS - VÝSTRAHA

Před rozbalením a instalací tohoto výrobku si přečtěte bezpečnostní pokyny ve vlastním jazyce uvedené v příloze 1.

DA - ADVARSEL

Læs sikkerhedsinstrukserne i Appendix 1 FØR udpakning og installation af dette produkt.

DE - WARNHINWEIS

Bevor Sie dieses Produkt auspacken und installieren, konsultieren Sie bitte Anhang 1 und lesen Sie die Sicherheitshinweise in Ihrer Sprache.

EL - ΠΡΟΕΙΔΟΠΟΙΗΣΗ

Γυρίστε στο Κεφάλαιο 1 και διαβάστε τις οδηγίες ασφαλείας στη δική σας γλώσσα προτού ανοίξετε αυτό το προϊόν για να το εγκαταστήσετε.

EN - WARNING

Before unpacking and installing this product, please consult Appendix 1 and read the safety instructions in your language.

ES - ADVERTENCIA

Consulte el apéndice 1 y lea las instrucciones de seguridad en su idioma antes de desempaquetar e instalar este producto.

ET - HOIATUS

Palun vaadake 1. lisa ning lugege enne selle toote lahtipakkimist ja paigaldamist ohutusjuhend läbi.

FI - VAROITUKSIA

Lue liitteessä 1 olevat omalla kielelläsi kirjoitetut turvaohjeet ennen tämän tuotteen pakkauksen avaamista ja asentamista.

FR - AVERTISSEMENT

Consulter l'annexe 1 et les instructions de sécurité dans votre propre langue avant de déballer et d'installer ce produit.

042-482-0621 / master@admt.kr

문의 사항은 www.admt.kr 로 연락 부탁 드리겠습니다.

GA - RABHADH

Téigh chuig aguisín 1 agus déan na treoracha sábháilteachta a léamh i do theanga féin le do thoil sula ndéantar an táirge seo a dhíphacáil agus a shuiteáil.

HR - NAPOMENA

Prije nego što proizvod izvadite iz ambalaže i ugradite ga, otvorite Prilog 1 i pročitajte sigurnosne upute na svom jeziku.

HU – FIGYELMEZTETÉS

A termék kicsomagolása és telepítése előtt olvassa el az 1. számú függelékben található, az Ön anyanyelvén hozzáférhető biztonsági utasításokat.

IT - AVVISO

Prima di aprire ed installare questo prodotto, leggere le istruzioni di sicurezza nella vostra lingua riportate nell'Appendice 1.

JA - 警告

この製品を箱から取り出し設置する前に、付録 1 に記載された安全性に関する注意書きをお読みください。

LT – ĮSPĖJIMAS

Prieš išpakuodami ir įdiegdami produktą, turite grįžti prie 1 priedo ir perskaityti nurodymus dėl saugos savo kalba.

LV – BRĪDINĀJUMS

Pirms šī izstrādājuma izsaiņošanas un uzstādīšanas izskatiet 1. pielikumā sniegtās drošības instrukcijas savā valodā.

MT - TWISSIJA

Jekk jogħġbok mur f'appendiċi 1 u aqra l-istruzzjonijiet tas-sigurtà fil-lingwa tiegħek qabel ma toħroġ dan il-prodott mill-ippakkjar u tinstallah.

NL - WAARSCHUWING

Ga naar appendix 1 en lees de veiligheidsinstructies in uw eigen taal, voordat u dit product uitpakt en installeert.

PL - OSTRZEŻENIE

Przed rozpakowaniem i zainstalowaniem tego produktu prosimy o zapoznanie się z Dodatkiem 1 i przeczytanie zaleceń dotyczących bezpieczeństwa w danym języku.

PT - ADVERTÊNCIA

Você deve retornar ao Anexo 1 e ler as instruções de segurança em seu idioma antes de desembalar e instalar este produto.

042-482-0621 / master@admt.kr

문의 사항은 www.admt.kr 로 연락 부탁 드리겠습니다.

RO - AVERTISMENT

Înainte de a desface ambalajul şi a instala acest produs, vă rugăm să căutaţi Anexa 1 şi să citiţi cu atenţie instrucţiunile de siguranță, în limba română.

SK - VÝSTRAHA

Pred rozbalením a inštaláciou tohto produktu si pozrite prílohu 1 a prečítajte si bezpečnostné pokyny vo vašom jazyku.

SL - OPOZORILO

Preden izdelek vzamete iz embalaže in ga vgradite, odprite Prilogo 1 in preberite varnostna navodila v svojem jeziku.

SV - VARNING

Gå till bilaga 1 och läs säkerhetsinstruktionerna på ditt eget språk innan du packar upp och installerar denna produkt.

ZH-TW - 警告

在拆開和安裝本產品之前，請翻頁至附錄 1 閱讀母語的安全指示。

ZH - 警告

在拆包和安装本产品之前，请翻到附录1，阅读中文版安全说明。

www.admt.kr

042-482-0621 / master@admt.kr

문의 사항은 www.admt.kr 로 연락 부탁 드리겠습니다.

ACR3 warnings

Pinch hazards exist between moving parts and between moving and static parts. Do not hold the probe head during movements, or during manual probe changes.

In all applications involving the use of machine tools or CMMs, eye protection is recommended.

Beware of unexpected movement. The user should remain outside of the full working envelope of probe head / extension / probe combinations.

Remove power before performing any maintenance operations.

For instructions regarding the safe cleaning of Renishaw products, refer to the Maintenance section of the relevant product documentation.

It is the machine supplier's responsibility to ensure that the user is made aware of any hazards involved in operation, including those mentioned in Renishaw product documentation, and to ensure that adequate guards and safety interlocks are provided.

www.admt.kr

042-482-0621 / master@admt.kr

문의 사항은 www.admt.kr 로 연락 부탁 드리겠습니다.

ACR3 introduction

This guide contains information relating to the installation and operation of Renishaw's ACR3 (autochange rack) system.

This guide takes a step by step approach to fitting, aligning and datuming the rack as well as providing operational and troubleshooting guidance.

System integration and software routines recommended for the successful implementation of the ACR3 are also provided.

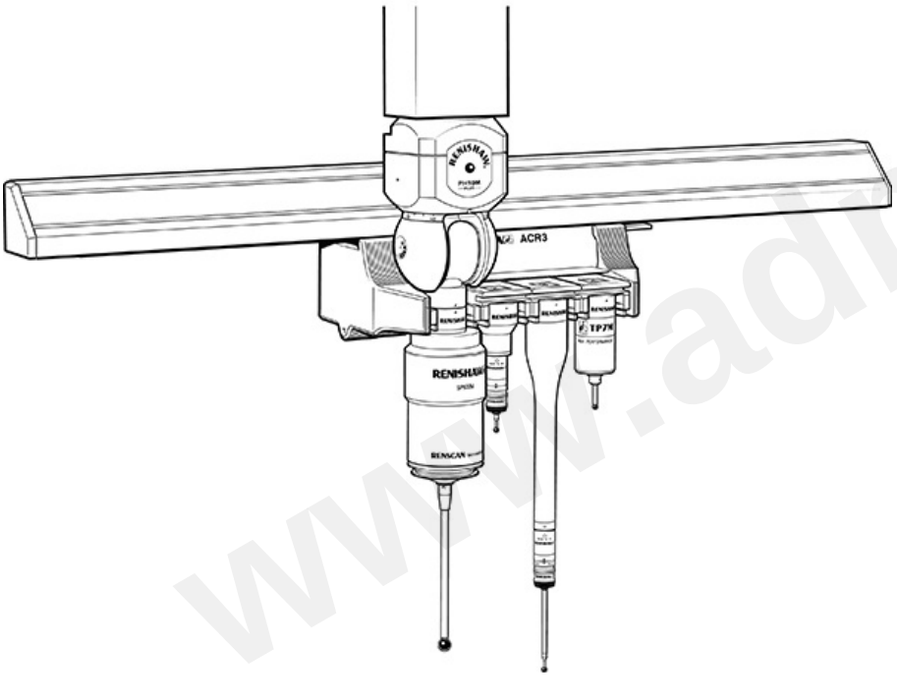

www.admt.kr

042-482-0621 / master@admt.kr

문의 사항은 www.admt.kr 로 연락 부탁 드리겠습니다.

ACR3 system description

Renishaw's ACR3 is a four port rack that facilitates fast, automatic probe exchange without the need for probe re-qualification. The ACR3 is a four port mechanical design that traverses the MRS rail. Driven by the motion of the CMM, it locks and unlocks the autojoint between the probe and the probe head. In addition, the ACR3 provides covered storage and protection for up to eight probes and extension bars (two four port systems can be linked to provide an eight port system).

Mounted within the CMM's working envelope, the ACR3 is combined with the modular rack system (MRS / MRS2) to form an automatic change rack for probes and extension bars that incorporate the Renishaw autojoint. Each rack port is of modular design to permit easy replacement should wear occur during the operational life of the ACR3.

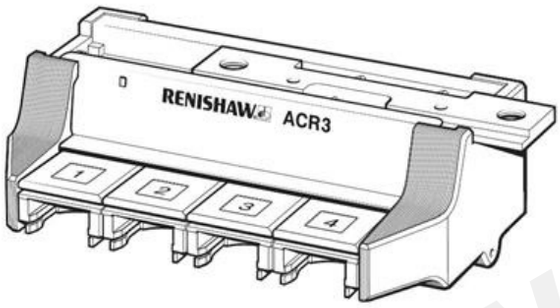

Fast probe exchange cycles are achieved by the probe head docking the original probe and selecting a new one. The autochange system consists of a four port autochange rack (ACR3) and the modular rack system (MRS / MRS2) as shown below.

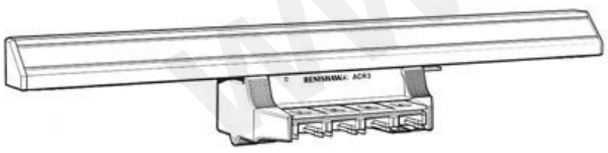

042-482-0621 / master@admt.kr

문의 사항은 www.admt.kr 로 연락 부탁 드리겠습니다.

Autojoint

The autojoint (shown below) is a highly repeatable kinematic joint, one half of which is attached to the probe head, the other half to a probe, extension bar or adapter.

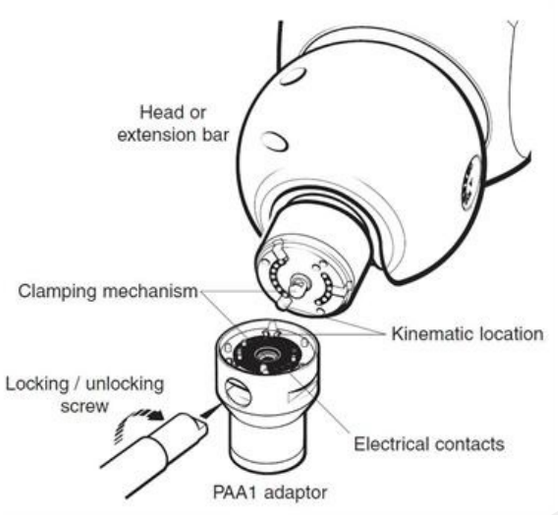

Locking and unlocking of the autojoint is achieved either manually, using an autojoint key, or automatically, using the autochange rack system. In all cases, the repeatability of the autojoint eliminates the need for probe requalification after each probe exchange.

MRS / MRS2

The MRS / MRS2 is the common mounting platform for the ACR3, SCP600 (stylus change port for SP600) and FCR25 (flexible change rack for SP25M). It is available in a number of different overall lengths and heights. For a detailed explanation of this system, please refer to the MRS installation and user's guide (Renishaw part number H-1000-5088) or the MRS2 installation guide (Renishaw part number H-1000-5255).

042-482-0621 / master@admt.kr

문의 사항은 www.admt.kr 로 연락 부탁 드리겠습니다.

ACR3 system dimensions

4 port ACR3 system dimensions

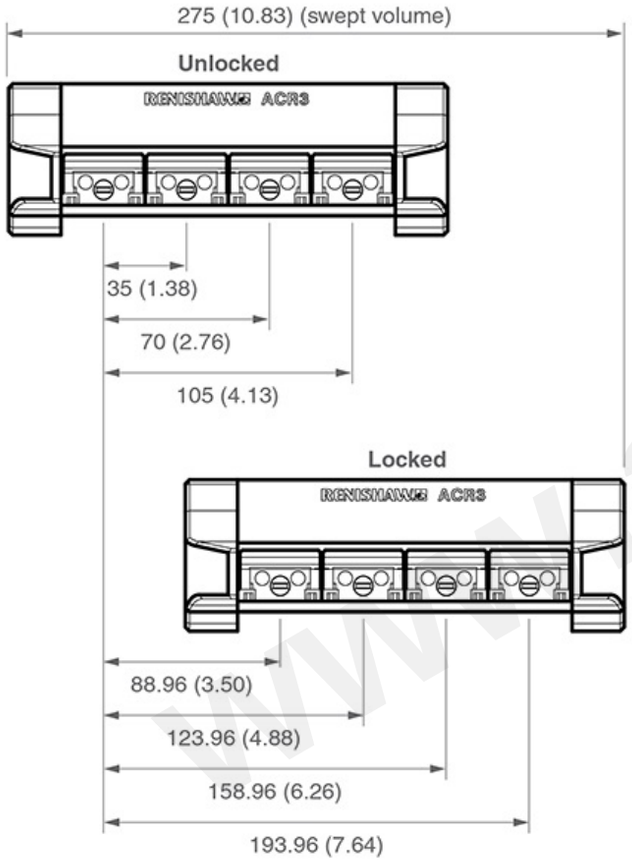

www.admt.kr

042-482-0621 / master@admt.kr

문의 사항은 www.admt.kr 로 연락 부탁 드리겠습니다.

8 port ACR3 system dimensions

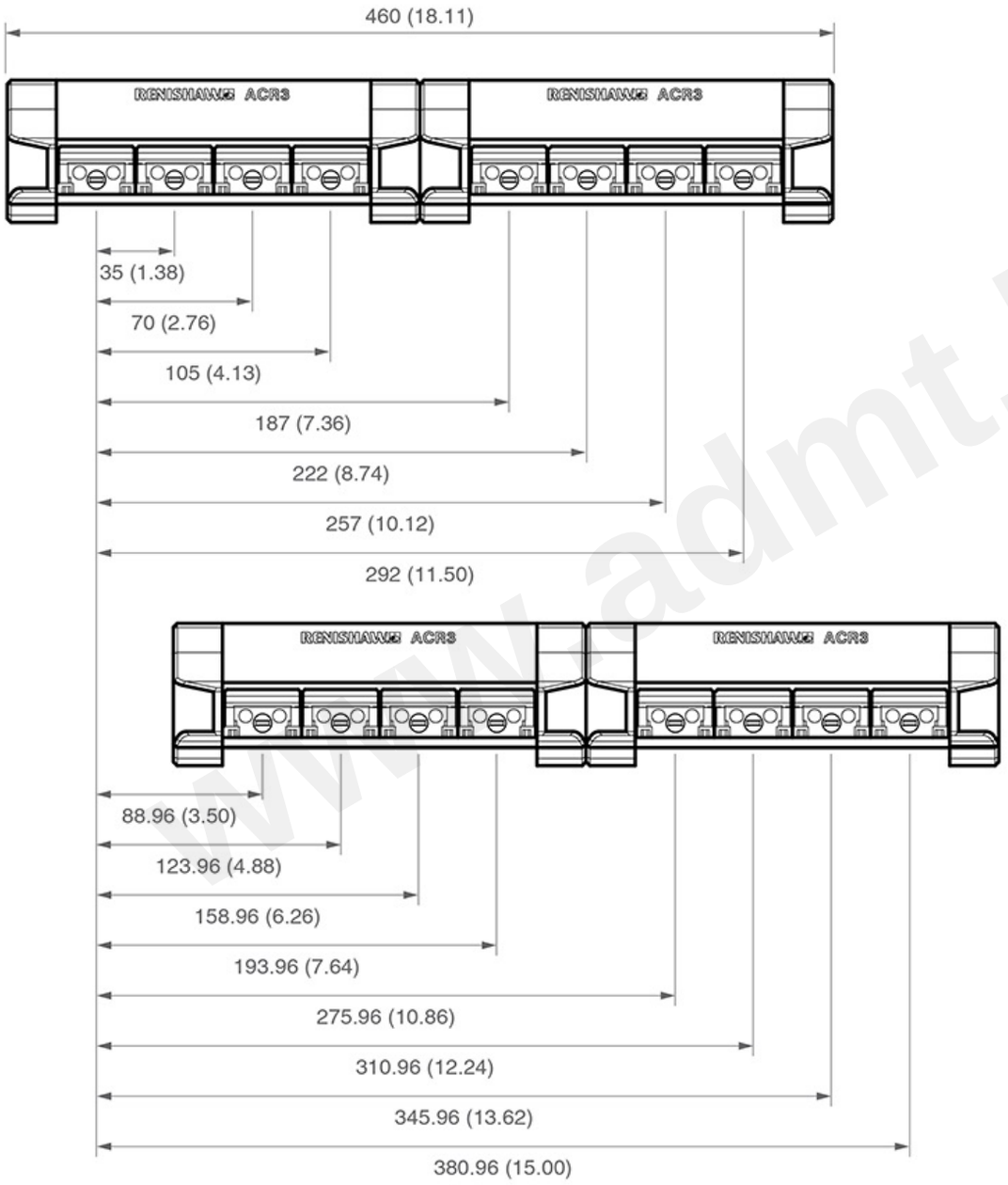

NOTE: Dimensions in mm (in).

042-482-0621 / master@admt.kr

문의 사항은 www.admt.kr 로 연락 부탁 드리겠습니다.

Compatible Renishaw products

Renishaw have a number of probe heads and probes that have either the male or female part of the autojoint fitted to them and are therefore compatible for use with the ACR3. For additional information, please refer to the relevant product documentation.

Heads

PH10M PLUS - A motorised indexing probe head with 720 repeatable positions suitable for all two wire and multiwired probes.

PH10MQ PLUS - This is an in-quill mounted version of the PH10M PLUS head.

PH6M - A fixed autojointed probe head suitable for all two wire and multiwired probes.

Probes

SP25M - High accuracy scanning probe enabling the user to scan for form measurement and reverse engineering, rapid TTP for geometric measurements is also possible.

SP600M - Analogue contact scanning probe which is ideal for profile scanning and it features 300 mm stylus capability. Permits the CMM to gather large amounts of data very rapidly.

TP7M - High accuracy strain gauge based touch-trigger probe.

TP6A - This is a probe suited to general purpose probing applications offering longer and heavier styli carrying capability.

OTP6M - An optical trigger probe that uses a visible laser spot to provide a non-contact inspection solution for CMMs.

Using the Renishaw range of probe adaptor bars (PAA), the complete range of Renishaw M8 probes can be used in conjunction with the autochange system. A brief description of some of these probes is given below:

TP20 - A 13 mm diameter kinematic touch-trigger probe consisting of a two piece design that provides the facility to repeatedly change probe modules without the need for re-qualification.

TP200 - A 13 mm diameter strain gauge based touch-trigger probe consisting of a two piece design that provides the facility to repeatedly change stylus modules without the need for re-qualification.

TP2 - A 13 mm diameter kinematic touch-trigger probe with adjustable stylus force.

TP6 - A 25 mm diameter kinematic touch-trigger probe of a robust design.

NOTES:
ACR3 can only be used in the horizonal orientation.
It is not possible to remove probes off the end of extension bars using ACR3.

042-482-0621 / master@admt.kr

문의 사항은 www.admt.kr 로 연락 부탁 드리겠습니다.

Head alignment for ACR3

It is necessary for the probe head to be aligned with both the movements of the CMM and the ACR3. This is because the autojoint is a high force mechanical joint that could cause operational errors if used with an incorrectly aligned ACR3.

NOTE: The Renishaw PH10 PLUS motorised head system has been designed so that the roll and pitch of the autojoint is held within the tolerances required for the ACR3 system, when connected to a standard Renishaw shank.

In the majority of installations only the yaw of the motorised head requires alignment. However, it is possible that the location of the probe head shank to the CMM quill, or the mounting face of the PH10MQ PLUS to the CMM quill, is not held to the required tolerances. In some cases, this could result in excessive ACR3 port wear or failure of the ACR3 to change probes.

This problem can be rectified by using either the AM1 or AM2 adjustment module.

www.admt.kr

042-482-0621 / master@admt.kr

문의 사항은 www.admt.kr 로 연락 부탁 드리겠습니다.

Alignment of the head - roll

The roll axis of the head is from the left-hand side to the right-hand side of the probe head. **The maximum recommended alignment error is 0.2°.**

The recommended procedure for setting the roll of a motorised or indexing probe head is as follows:

NOTE: During this procedure the probe should not be qualified.

1. Index the probe head to an A-axis position of 90° and a B-axis position of -90°.

2. Using the probe attached to the probe head, measure the qualification sphere on the CMM table (sphere 1). Use the centre of this measured sphere as a datum.

3. Index the probe head to an A-axis position of 90° and a B-axis position of 90°.

4. Using the probe attached to the probe head, measure the qualification sphere on the CMM table (sphere 2).

5. Calculate the roll angle for the probe head using the following formula:

arc TAN {Z axis position of sphere 2 / Y axis position of sphere 2} = Roll angle (recommended <0.2°)

6. If the roll angle exceeds 0.2° then adjustment is required, please refer to 'Adjusting the AM1' or 'Adjusting the AM2' as appropriate and repeat steps 1 to 5.

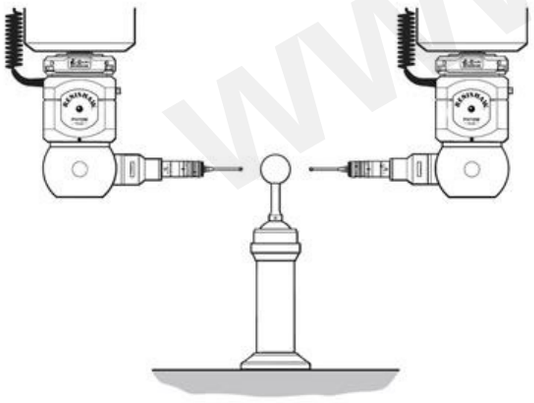

042-482-0621 / master@admt.kr

문의 사항은 www.admt.kr 로 연락 부탁 드리겠습니다.

Alignment of the head - pitch

The pitch axis of the head is from the front of the probe head (where the LED is located) to the rear of the probe head. **The maximum recommended alignment error is 0.2°.**

The recommended procedure for setting the pitch of a motorised or indexing probe head is as follows:

NOTE: During this procedure the probe should not be qualified.

1. Index the probe head to an A-axis position of 90° and a B-axis position of 0°.

2. Using the probe attached to the probe head, measure the qualification sphere on the CMM table (sphere 1). Use the centre of this measured sphere as a datum.

3. Index the probe head to an A-axis position of 90° and a B-axis position of 180°.

4. Using the probe attached to the probe head, measure the qualification sphere on the CMM table (sphere 2).

5. Calculate the pitch angle for the probe head using the following formula:

arc TAN { Z axis position of sphere 2 / X axis position of sphere 2 } = Pitch angle (recommended <0.2°)

6. If the pitch angle exceeds 0.2° then adjustment is required, please refer to 'Adjusting the AM1' or 'Adjusting the AM2' as appropriate and repeat steps 1 to 5.

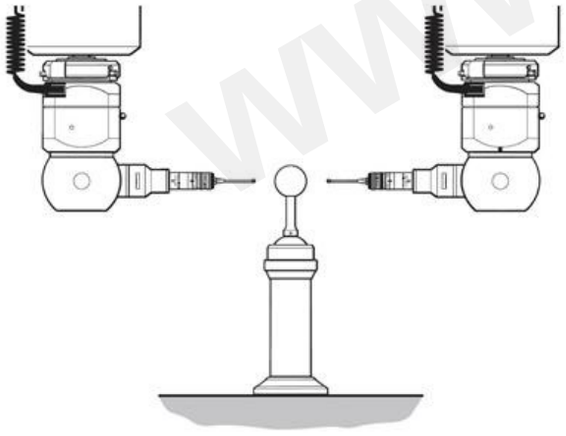

www.admt.kr

042-482-0621 / master@admt.kr

문의 사항은 www.admt.kr 로 연락 부탁 드리겠습니다.

Alignment of the head - yaw

The yaw axis of the head is the rotational axis of the probe head with respect to the quill of the CMM. **The maximum recommended alignment error is 0.2°.**

The recommended procedure for setting the yaw of a motorised or indexing head is as follows:

NOTE: During the procedure the probe should not be qualified.

1. Index the probe head to an A-axis position of 0° and a B-axis position required for an autojoint probe to enter the ACR3.

2. Using the probe attached to the probe head, measure the qualification sphere on the CMM table (sphere 1). Use the centre of the measured sphere as a datum.

3. Index the probe head to an A-axis position of 90°, maintaining the same B-axis position as in step 1.

4. Using the probe attached to the probe head, measure the qualification sphere on the CMM table (sphere 2).

5. Calculate the yaw angle of the probe head using the following formula:

arc TAN { X axis position of sphere 2 / Y axis position of sphere 2 } = Yaw angle (recommended <0.2°)

6. If the yaw angle exceeds 0.2° then adjustment is required, please refer to 'Adjusting the AM1' or 'Adjusting the AM2' as appropriate and repeat steps 1 to 5.

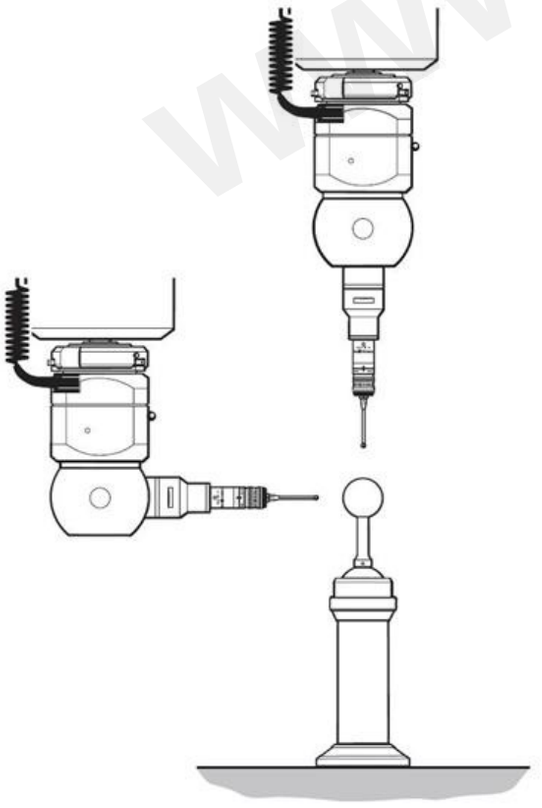

042-482-0621 / master@admt.kr

문의 사항은 www.admt.kr 로 연락 부탁 드리겠습니다.

Adjustment modules

AM1 adjustable module

The AM1 adjustment module is designed to provide quick and accurate angular alignment of the PH6M and PH10M PLUS with the axes of the CMM and Renishaw ACR3.

In addition, the quick release mechanism allows the probe heads to be removed for storage and replaced without further alignment. In-built overtravel protection minimises the risk of probe head damage.

Adjusting the AM1

Below are instructions on how to adjust the AM1 in order to align the probe head to the CMM axes. The procedure should be carried out in the order specified:

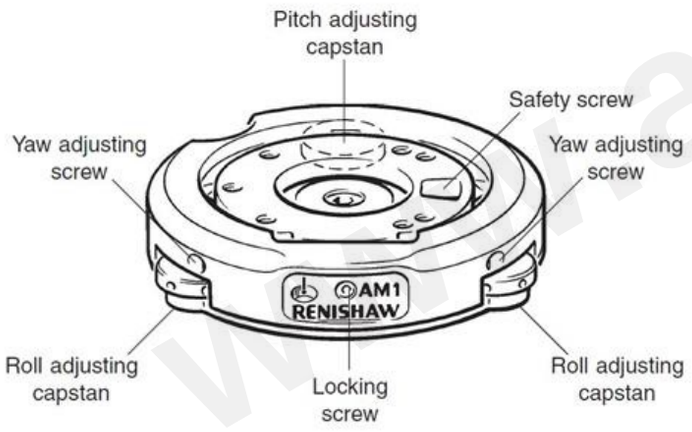

Roll adjustment

Rotate the roll adjusting capstans equally and in opposite directions (i.e. rotate one capstan clockwise and the other anti-clockwise) to adjust roll.

Pitch adjustment

Rotate the pitch adjusting capstan to increase or decrease the pitch.

Yaw adjustment

1. Release the lock screw.
2. Rotate the yaw adjusting screws equally in opposite directions to provide the required yaw.
3. Tighten the screws against each other without applying excessive torque.
4. Tighten the lock screw.

042-482-0621 / master@admt.kr

문의 사항은 www.admt.kr 로 연락 부탁 드리겠습니다.

Quick release of the AM1 from shank

1. Release the lock screw.
2. Retract ONE yaw adjustment screw.

NOTE: If repeatability of position is required on re-attachment, DO NOT alter the other screw. This repeatability of position is normally sufficient for alignment with the autochange rack, but probes must be re-qualified for measurement.

Re-attachment of AM1 to shank

1. Locate the AM1 against the shank and rotate until engaged.
2. Tighten the yaw adjustment screw.
3. Tighten the locking screw.

AM2 adjustment module

The AM2 adjustment module is designed to provide quick and accurate angular alignment of the PH10MQ PLUS motorised probe head with the axes of the CMM and Renishaw ACR3.

The AM2 consists of the adjuster plate, which is attached to the quill of the CMM, and a set of adjusters fitted to the flange of the head.

The probe head is fixed to the adjuster plate by a pair of captive screws.

The AM2 incorporates a quick release mechanism that allows the same probe head to be removed for storage and refitted without further alignment.

NOTE: If repeatability of position is required on re-attachment, only the securing screws should be released. Do not alter the other screws. This repeatability of position is normally sufficient for alignment with the autochange rack, but probes must be requalified for measurement.

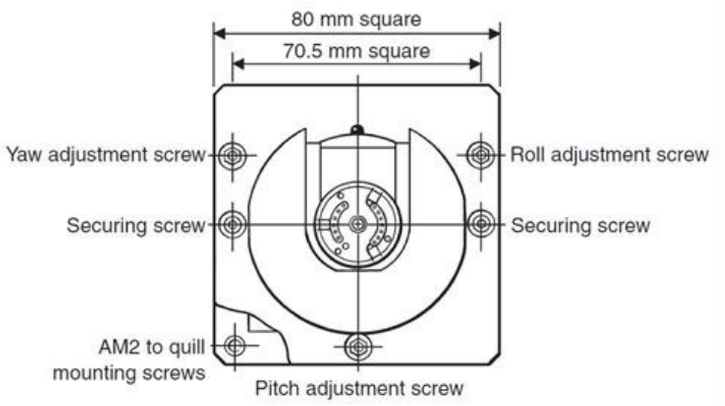

042-482-0621 / master@admt.kr

문의 사항은 www.admt.kr 로 연락 부탁 드리겠습니다.

Adjusting the AM2

A special tool is supplied, consisting of a concentric hexagon key and socket spanner. This should be located on the adjusters and locknuts recessed into the face of the head mounting flange.

NOTE: Springs are fitted under the adjuster locknuts to provide some preload during set up.

The procedure to use this tool is:

1. Slacken the locknut slightly using the outer part of the tool.

2. Set the adjuster using the inner part of the tool.

3. While holding the adjuster stationary with the inner part of the tool, tighten the locknut using the outer part of the tool:

Roll adjustment: Using the AM2 tool and the procedure given above, adjust the roll adjustment screw on the AM2.

Pitch adjustment: Using the AM2 tool and the procedure given above, adjust the pitch adjustment screw on the AM2.

Yaw adjustment: Using the AM2 tool and the procedure given above, adjust the yaw adjustment screw on the AM2.

4. Tighten the two securing screws.

NOTE: Tightening the securing screws could cause the roll, pitch or yaw alignment to change. It is therefore recommended that the alignments are checked after this procedure.

www.admt.kr

042-482-0621 / master@admt.kr

문의 사항은 www.admt.kr 로 연락 부탁 드리겠습니다.

Fitting a four port ACR3 system to MRS / MRS2

It is recommended that the ACR3 rack be attached to the MRS / MRS2 rack using the following procedure. During this procedure, it is assumed that the MRS / MRS2 rack has been installed as detailed in the MRS installation guide (Renishaw part number H-1000-5088) or the MRS2 installation guide (Renishaw part number H-1000-5255).

CAUTION: Moving parts, beware of pinch hazards. The MRS / MRS2 must be securely bolted to the machine table.

1. With the ARC3 in fully **unlocked** position; place bolt through the righthand countersunk clearance hole, into thread of the long 'T' nut and finger tighten.

NOTE: Ensure T-nuts are positioned as indicated below.

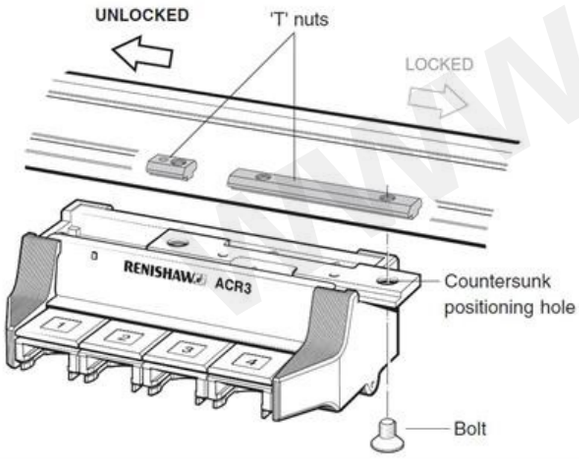

2. With the ACR3 in fully **locked** position; place bolt through the left-hand countersunk clearance hole, into the thread of the short 'T' nut and finger tighten.

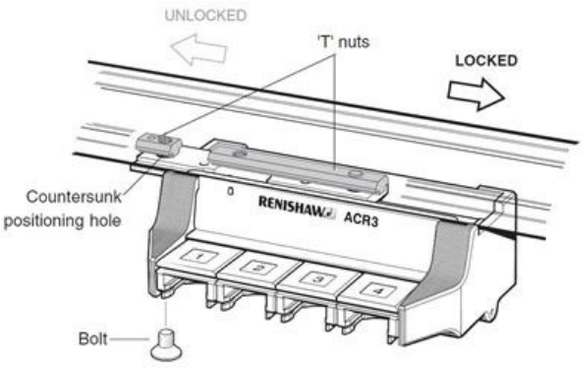

042-482-0621 / master@admt.kr

문의 사항은 www.admt.kr 로 연락 부탁 드리겠습니다.

3. Position the ACR3 on the MRS / MRS2 rack such that the rack can move freely from its unlocked position to its locked position.

4. Using the 5 mm hex key (supplied), tighten the two countersunk bolts.

5. Check the alignment of the ACR3 with respect to the CMM axis. This is achieved by taking two points on the front of the ACR3 as shown below. The 'run out' of the ACR3, with respect to the CMM axis, should be less than 0.5 mm between these two points.

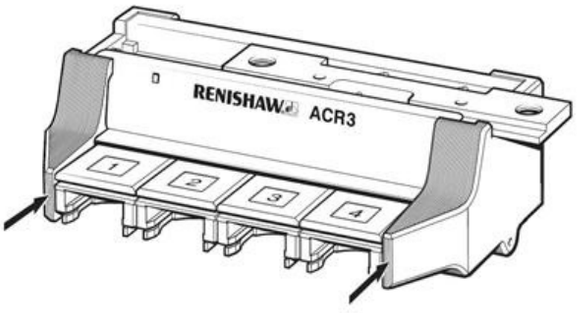

6. Adjustment of the ACR3 (with respect to the machine axis) should be completed by releasing the appropriate countersunk bolt and manually re-positioning the ACR3 and then re-tightening the bolt.

CAUTION: Ensure rack does not overhang the MRS / MRS2 in either the locked or unlocked position.

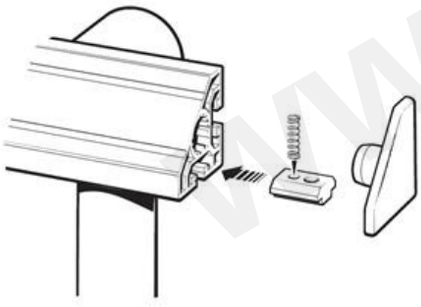

NOTE: The springs supplied can be inserted into the short 'T' nut and used to maintain the position of the 'T' nut in the MRS rail.

042-482-0621 / master@admt.kr

문의 사항은 www.admt.kr 로 연락 부탁 드리겠습니다.

Fitting an eight port ACR3 system to MRS / MRS2

The long 'T' nut is designed to allow two 4 port units to be linked, as shown below.

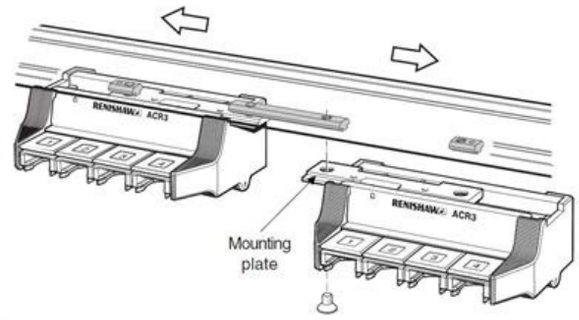

The distance required between the two racks is 'set' by the 'T' nut.

CAUTION: Moving parts, beware of pinch hazards. The MRS / MRS2 must be securely bolted to the machine table.

1. Mount ACR3 ports 1-4 as detailed in "Fitting a four port ACR3 system to MRS / MRS2". **However, ensure the long 'T' nut is positioned as indicated above.**

2. Slide ACR3 to the fully unlocked position (left-hand side of travel). Push ACR3 ports 5 - 8 into the fully locked position (right-hand side of travel). Pass the bolt through the left hand countersunk clearance hole into the long T nut. Finger tighten.

NOTE: The long 'T' nut must be used when linking two ACR3s.

CAUTION: Ensure rack does not overhang the MRS / MRS2 in either the locked or unlocked position.

3. Push the ACR3 ports 5 - 8 into the fully unlocked position to the left. Place bolt through the right-hand countersunk clearance hole into short 'T' nut and finger tighten.

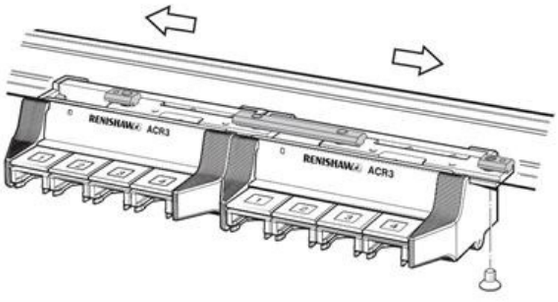

042-482-0621 / master@admt.kr

문의 사항은 www.admt.kr 로 연락 부탁 드리겠습니다.

4. Position the ACR3 on the MRS / MRS2 so that the rack can move freely from its unlocked position to its locked position.

5. Using the 5 mm hex key (supplied), tighten the four countersunk bolts.

6. Using the connection bolt and O-ring supplied with the ACR3 kit, join the two ACR3 units as shown below. Use the O-ring supplied to separate the two racks.

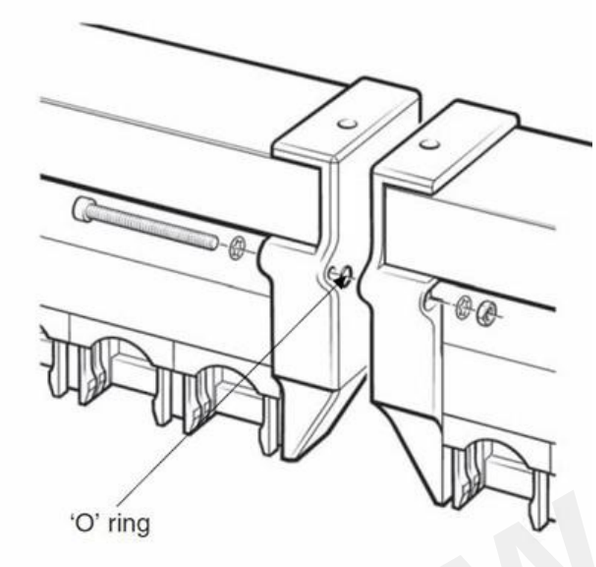

7. Check the alignment of each of the ACR3's with respect to the CMM axis. This is achieved by taking two points on the front of each ACR3 unit. The 'run out' of each of the ACR3 units, with respect to the CMM axis, should be less than 0.5 mm, between the points on each rack.

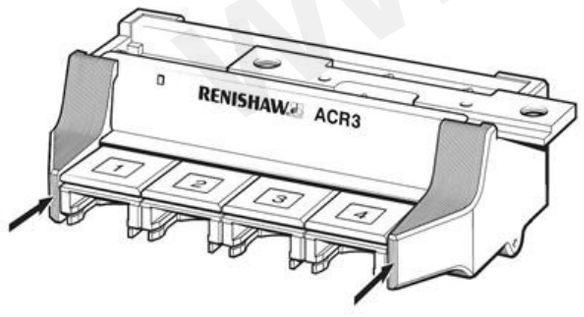

8. Adjustment of the ACR3's (with respect to the machine axis) should be completed by releasing the necessary mounting bolt, manually repositioning the ACR3 and then re-tightening the bolt.

042-482-0621 / master@admt.kr

문의 사항은 www.admt.kr 로 연락 부탁 드리겠습니다.

Datuming the ACR3

The following section describes the recommended procedure for datuming the ACR3 once it is fitted to the MRS rack and the MRS is fitted to the CMM table (please refer to 'Fitting the ACR3 to the MRS - 4 port and 8 port').

Each rack comes with a setting gauge (see below) that is designed to assist in the datuming of the ACR3.

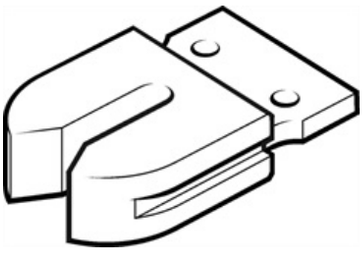

Locating the Z position

1. Position the ACR3 so that it is in the unlocked position (positioned to the left-hand side of the travel).

2. Insert the lid clips as shown below.

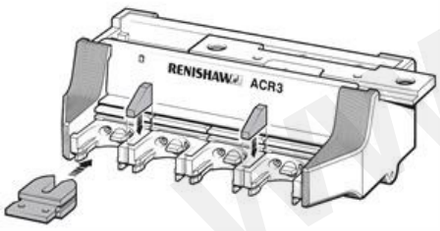

NOTE: This procedure assumes the rack is aligned with the Y-axis. If the rack is aligned with the X-axis, transpose X and Y.

3. Position the ACR3 setting gauge into port 1 as shown.

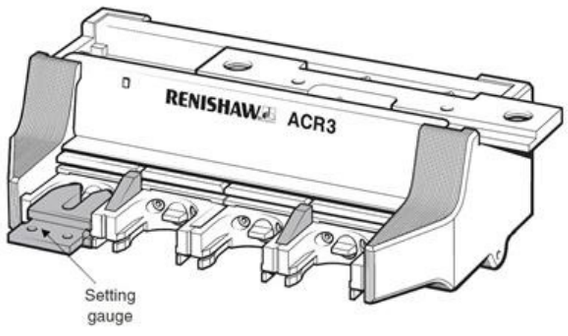

042-482-0621 / master@admt.kr

문의 사항은 www.admt.kr 로 연락 부탁 드리겠습니다.

4. Inhibit the probe signal. It is recommended that this is done from within the CMM software.

Use extreme caution: The machine could be crashed.

5. Remove the probe from the probe head (at the autojoint).

6. Position the autojoint puller into the central slot of the ACR3 setting piece. Take care not to move the position of the ACR3.

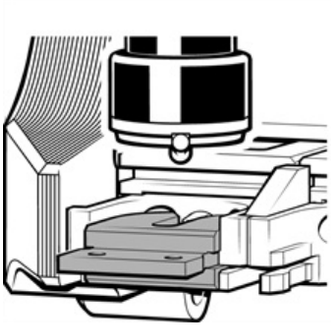

7. Using ~50 µm DCC incremental moves, slowly lower the autojoint face so that it just touches (machine Z-axis) onto the top face of the setting gauge. Use it as a feeler gauge to identify the correct Z-axis position for the probe head with respect to the ACR3. Record a point at this position (point A).

NOTE: More than one attempt may be required to get a 'feel' for this operation.

LIVE CMM AXES: REMAIN OUTSIDE WORKING ZONE BETWEEN Z POSITION CHECKS. DO NOT ALLOW OTHERS TO OPERATE THE CMM DURING THIS PROCESS.

8. Remove the probe head from the ACR3 setting piece.

It is not possible to use the probe to find the 'Z' position because of tolerance stackups within the probe and stylus combination.

042-482-0621 / master@admt.kr

문의 사항은 www.admt.kr 로 연락 부탁 드리겠습니다.

Locating the X position

1. Move the probe head so that the external surface of the autojoint is just touching the front of the ACR3 setting piece. Use ~50 µm DCC incremental moves, to identify the correct Y-axis position.

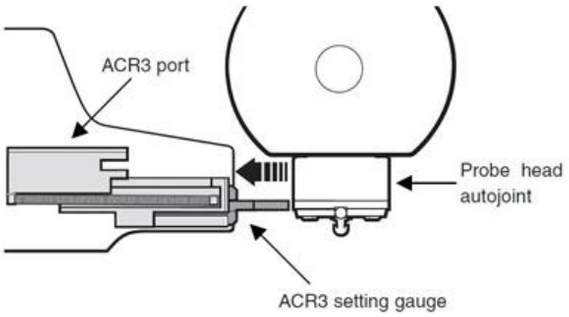

2. Record a point at this position (point B).

3. Move the probe head clear of the ACR3 and connect the probe assembly.

NOTE: Ensure that the autojoint locking cam is positioned approximately 5° backed off from the fully locked position and enable the probe signal.

4. Remove the ACR3 setting piece from port 1.

Locating the Y position

1. Manually take four points on the top of port 1 (port1 unlocked, points 1 to 4) as shown below, to create a plane.

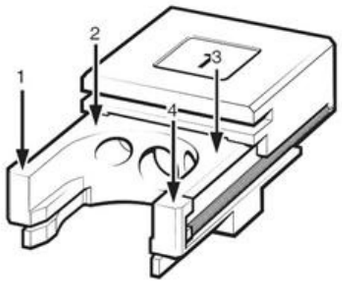

NOTE: Take care not to take a point to close to the lid clip as this may cause a problem later on in the datuming procedure.

2. Manually take four points round the curved part at the rear of port 1 (port1 unlocked, circle centre). Take care to avoid the driver blade and the mounting screw holes.

042-482-0621 / master@admt.kr

문의 사항은 www.admt.kr 로 연락 부탁 드리겠습니다.

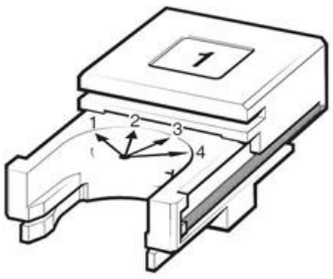

3. Construct an axis system using:

- "Port1 unlocked, points 1 to 4" as the primary plane (refer to step 1)
- "Port1 unlocked, circle centre" as the secondary axis and tertiary axis origin (refer to step 2)
- Store this axis system as (axis 1)

4. The CMM can now locate ports 2 to 4 in the unlocked position under CNC control. The table below shows the nominal location of the centre of these ports, assuming that the rack is running along the CMM's Y-axis.

Port	X position	Y position
1	0	0
2	0	35
3	0	70
4	0	105

NOTE: Dimensions in mm (in).

The recommended procedure for locating the ports is as follows (see steps 1 and 2 for reference):

- Move stylus to nominal XY centre of port
- Move stylus to 2 mm below the top surface of the port, in the current axis (axis 1) system
- Take 4 points round the curved part at the rear of the port
- Use the 4 points to create a circle, use this as a sub-datum in the XY axis
- Take 4 points on the top surface of the port

Port	X position	Y position
1	8	-13.5
2	-8	-13.5
3	-8	13.5
4	8	13.5

NOTE: Dimensions in mm (in).

042-482-0621 / master@admt.kr

문의 사항은 www.admt.kr 로 연락 부탁 드리겠습니다.

- Store the points as port* unlocked points 1 to 4
- Store the circle as port* unlocked circle 1
- Recall axis 1 (see step 3)
- Locate the next port

* Port number (e.g. 1, 2, 3 etc.).

6. If an eight port ACR3 is to be fitted to the CMM then step 7 should be completed, otherwise please go to step 8.

7. The CMM can now locate ports 5 to 8 in the unlocked position under CNC control. The table below shows the nominal location of the centre of these ports, with respect to the axis 1, assuming that the rack is running along the CMM's Y-axis.

Port	X position	Y position
5	0	187
6	0	222
7	0	257
8	0	292

NOTE: Dimensions in mm (in).

The recommended procedure for locating 5 to 8 ports is as follows (see steps 1 and 2 for reference):

- Take a Z-axis reference point (x = 6.5 mm, y = 173.8 mm) for ACR3 in the unlocked position. Use this point as a Z-axis sub datum for locating ports 5 through 8 in the unlocked position.
- Move stylus to nominal XY centre of port
- Move stylus to 2 mm below the top surface of the port, in the current axis (axis 1) system
- Take 4 points round the curved part at the rear of the port
- Use the 4 points to create a circle, use this as a sub-datum in the XY axis
- Take 4 points on the top surface of the port

Port	X position	Y position
1	8	-13.5
2	-8	-13.5
3	-8	13.5
4	8	13.5

NOTE: Dimensions in mm (in).

042-482-0621 / master@admt.kr

문의 사항은 www.admt.kr 로 연락 부탁 드리겠습니다.

- Store the points as port* unlocked points 1 to 4
- Store the circle as port* unlocked circle 1
- Recall axis 1. (see step 3)
- Locate the next port

* Port number (e.g. 5, 6, 7 etc.).

8. Move the probe head clear of the ACR3.

9. Move the ACR3 to the locked position (positioned to the right-hand side of the travel).

10. Take a Z-axis reference point (x = 6.5 mm, y = 75.5 mm) for ACR3 position in the locked position. Use this point as a Z-axis sub datum for locating ports 1 through 4 in the locked position.

11. The CMM can now locate ports 1 to 4 in the locked position under CNC control. The table below shows the nominal location of the centre of these ports.

Port	X position	Y position
1	0	88.96
2	0	123.96
3	0	158.96
4	0	193.96

NOTE: Dimensions in mm (in).

Recommended procedure for locating port:

- Move stylus to nominal XY centre of port
- Move stylus to 2 mm below the top surface of the port, in the current axis
- Take 4 points round the curved part at the rear of the port
- Use the 4 points to create a circle, use this as a sub-datum in the XY axis
- Take 4 points on the top surface of the port

Port	X position	Y position
1	8	-13.5
2	-8	-13.5
3	-8	13.5
4	8	13.5

NOTE: Dimensions in mm (in).

042-482-0621 / master@admt.kr

문의 사항은 www.admt.kr 로 연락 부탁 드리겠습니다.

- Store the points as portx locked points 1 to 4
- Store the circle as portx locked circle 1
- Recall axis 1 (see step 3)
- Apply Z axis reference point as a Z-axis sub-datum (see step 10)
- Locate the next port

12. If an eight port ACR3 is to be fitted to the CMM then this step should be completed, otherwise please go to step 14.

13. The CMM can now locate ports 5 to 8 in the locked position under CNC control. The table below shows the nominal location of the centre of these ports, with respect to axis 1, assuming that the rack is running along the CMM's Y-axis.

Port	X position	Y position
5	0	275-96
6	0	310.96
7	0	345.96
8	0	380.96

NOTE: Dimensions in mm (in).

Recommended procedure for locating port:

- Take a Z axis reference point (x = 6.5 mm, y = 262.3 mm) for ACR3 in the unlocked position. Use this point as a Z-axis sub datum for locating ports 5 to 8 in the unlocked position.
- Move stylus to nominal XY centre of port
- Move stylus to 2 mm below the top surface of the port, in the current axis (axis 1) system
- Take 4 points round the curved part at the rear of the port
- Use the 4 points to create a circle, use this as a sub-datum in the XY axis
- Take 4 points on the top surface of the port

Port	X position	Y position
1	8	-13.5
2	-8	-13.5
3	-8	13.5
4	8	13.5

NOTE: Dimensions in mm (in).

042-482-0621 / master@admt.kr

문의 사항은 www.admt.kr 로 연락 부탁 드리겠습니다.

- Store the points as portx locked points 1 to 4
- Store the circle as portx locked circle 1
- Recall axis 1. (see step 3)
- Locate the next port

NOTE: As the movement of the ACR3 may not be a single axis move, the following procedure utilises dedicated axis systems for each port.

14. An axis system is now constructed for each of the ports. This step shows the construction steps for port 1 and should be repeated for each port:

- Construct a plane from port1 unlocked points 1 to 4 and port1 locked points 1 to 4 (port plane)
- Construct a line from port1 unlocked circle 1 and port1 locked circle 1 (port line)
- Construct an axis system (port1 axis) using:
  - Port plane as the primary axis
  - Port line as the secondary axis
  - Port1 unlocked circle 1 as the tertiary axis and origin of the axis system
- Save axis system as port1 axis
- Repeat this for the remaining ports

15. The Z axis offset now has to be calculated as follows:

- Recall port1 axis
- Recall Point A (see 'Locating the Z position' step 7) in this axis system
- Use the following formula:

probe Z offset = Z axis of Point A * – 1

16. The probe X axis offset now has to be calculated as follows:

- Recall port1 axis
- Recall Point B (see 'Locating the X position' step 1) in this axis system
- Use the following formula:

probe X offset = X axis of Point B – 42 mm

17. Apply the Z and X probe offsets to all the ACR3 axis systems as follows, as constructed in step 14:

- Recall portx axis
- Translate the Z-axis datum position by probe Z offset
- Translate the X-axis datum position by probe X offset
- Store as portx axis

18. Move the probe clear of the ACR3.

19. Recall ACR3 axis4, move the probe head to a position of X 40 mm,Y 62.6 mm, Z 0 mm.

20. Move the ACR3 so that port 4 is located behind the position of the probe head.

042-482-0621 / master@admt.kr

문의 사항은 www.admt.kr 로 연락 부탁 드리겠습니다.

21. Slowly move the probe head in the X axis to a position of X = 0 mm (probe docked into the ACR3).

22. With the head located in port 4 move along the ACR3 Y axis using 50 µm to 100 µm DCC moves until the alignment circle is positioned in the centre of the alignment window. Record a point (point C) in this position (see below for reference).

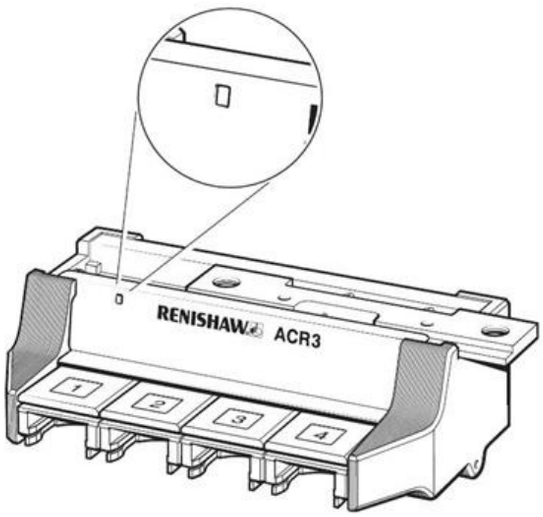

23. The probe Y-axis offset now has to be calculated:

probe Y offset = Y axis position of point C – 62.6 mm

24. Apply the Y probe offset to all the ACR3 axis systems:

- Recall portx axis as constructed in step 17
- Translate the Y-axis datum position by probe Y offset
- Store as portx axis

25. Calculate the ACR3 traverse distance (distance):

- Recall port1 axis
- Recall port1 locked circle (refer to step 11) the Y-axis position of this feature is the traverse distance for the ACR3 (distance)

26. This traverse distance is then used in the load/unload routines.

www.admt.kr

042-482-0621 / master@admt.kr

문의 사항은 www.admt.kr 로 연락 부탁 드리겠습니다.

ACR3 change routine

CAUTION: During various stages of this recommended change routine the probe signal is inhibited. The trigger line cannot therefore be used to reliably indicate the probe system status.

Load routine

All movements are absolute moves in mm and in respective port X-axis system.

	X position	Y position	Z position
Recall port* axis			
Stand-off position	40	0	7
Entry into port	0	0	7
Connect female autojoint	0	0	0
Move to lock autojoint	0	Distance (refer to step 25 of Datuming the ACR3)	0
Move to lift off position	0 Distance (refer to step 25 of Datuming ACR3 web page)	Distance (refer to step 25 of Datuming the ACR3)	0.1
Exit port	40	Distance (refer to step 25 of Datuming the ACR3)	0.1
Enable probe signal			

NOTE: Due to forces exerted by the autochange operation on the head, it is strongly recommended that the head is unlocked and re-locked immediately after picking up a probe, in order to maintain repeatability.

042-482-0621 / master@admt.kr

문의 사항은 www.admt.kr 로 연락 부탁 드리겠습니다.

Unload routine

All movements are absolute moves in mm and in respective portx axis system.

	X position	Y position	Z position
Recall port* axis			
Stand-off position	40	Distance (refer to step 25 of Datuming the ACR3)	0.1
Inhibit probe signal			
Entry into port	0	Distance (refer to step 25 of Datuming the ACR3)	0.1
Move to unlock autojoint	0	0	0.1
Release from the female autojoint	0	0	7
Exit port	40	0	7

www.admt.kr

042-482-0621 / master@admt.kr

문의 사항은 www.admt.kr 로 연락 부탁 드리겠습니다.

ACR3 troubleshooting

Black deposit on probe autojoint

Possible cause	Solution
Badly aligned probe head.	Re-align probe head - refer to 'Head alignment for ACR3'.
Badly aligned ACR3.	Re-datum ACR3 - refer to 'Datuming the ACR3'.

Excessive wear on ACR3 port

Possible cause	Solution
Badly aligned probe head.	Re-align probe head - refer to 'Head alignment for ACR3'.
Badly aligned ACR3.	Re-datum ACR3 - refer to 'Datuming the ACR3'.
Approaching the expected life of the ACR3 port.	Replace the port - refer to 'ACR3 accessories and spare parts' and 'Maintenance'.

ACR3 does not run smoothly

Possible cause	Solution
Badly aligned probe head.	Re-align probe head - refer to 'Head alignment for ACR3'.
Badly aligned ACR3.	Re-datum ACR3 - refer to 'Datuming the ACR3'.
Damage occured to ACR3.	Return the ACR3 to the local Renishaw service centre.

Head obstructing during ACR3 lock / unlock sequence

Possible cause	Solution
Badly aligned probe head.	Re-align probe head - refer to 'Head alignment for ACR3'.
Badly aligned ACR3.	Re-datum ACR3 - refer to 'Datuming the ACR3'.
Attempting to "stack" extension bars.	The ACR3 system has not been designed to support the stacking of extension bars.
Damage occured to ACR3.	Return the ACR3 to the local Renishaw service centre.

042-482-0621 / master@admt.kr

문의 사항은 www.admt.kr 로 연락 부탁 드리겠습니다.

ACR3 accessories and spare parts

As the ACR3 is part of a modular system offered by Renishaw, all part numbers for the ACR3 system, the MRS system and other components that can be fitted to the rack are specified below:

ACR3 system

Component	Part number
ACR3 4 port rack kit (includes tooling)	A-5036-0005
Spares:	
ACR3 setting gauge	M-5036-0004
Lid clip	M-1051-0043
'T' nut	P-NU18-0005
Long 'T' nut	M-5036-0055
Port replacement kit (4 ports)	A-5036-0049

MRS system

Component	
MRS rack - 400 mm long	A-4192-0050
MRS rack - 600 mm long	A-4192-005
MRS rack - 1000 mm long	A-4192-0052
Spares:	
MRS leg - 125 mm long	A-4192-0053
MRS leg - 62.5 mm long	A-4192-0061
MRS feet	A-4192-0055
MRS stand off adaptor	A-4192-0058
MRS leg to foot adaptor	A-4192-0055
Plastic end cap	P-BG03-0014

SCP600 (stylus change port for the SP600 probe)

Component	Part number
SCP600 port (includes tooling)	A-2098-0933
Spares:	
Stylus spanner	M-5000-3707

042-482-0621 / master@admt.kr

문의 사항은 www.admt.kr 로 연락 부탁 드리겠습니다.

ACR3 maintenance

Each ACR3 rack port is of modular design to permit easy replacement by the user should wear occur during the operational life of the ACR3. There are no other user serviceable parts, should the unit become defective it should be returned to the local Renishaw service centre.

Cleaning

The ACR3 is not a sealed unit. Cleaning of the ACR3 should therefore be restricted to the use of a clean dry cloth.

Port replacement

> ⚠ **CAUTION:** The ACR3 is positioned in the working envelope of the CMM, it is recommended that power is removed from the CMM servos throughout the port replacement procedure.

Port replacement is carried out using the following procedure:

1. Release and remove the two M3 × 6 mm long screws and remove the port(s) to be replaced.
2. Loosen the M3 × 6 mm long screws securing the remaining ports in preparation for final alignment.

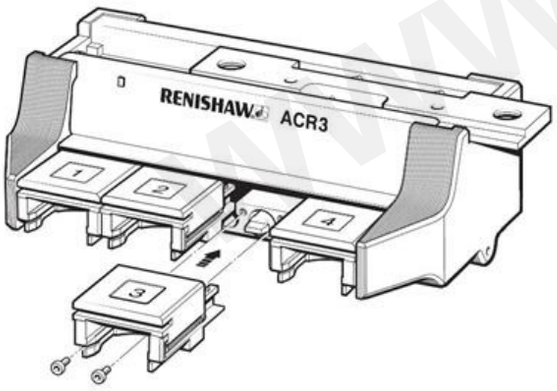

3. Position the replacement port(s) onto the rack and loosely screw in place.
4. Open all the port lids using the lid clips supplied with the ACR3.
5. Place a rigid straight edge along the underside of all the ports and tighten all M3 × 6 mm long screws to 0.3 Nm. It is very important that the ports are correctly aligned.
6. Remove straight edge and lid clips.
7. Re-datum the rack (see 'Datuming of the ACR3').

042-482-0621 / master@admt.kr

문의 사항은 www.admt.kr 로 연락 부탁 드리겠습니다.

Appendix 1 - ACR3 international safety warnings

BG - Предупреждения за ACR3

Съществуват рискове от притискане между движещи се части и между движещи се и неподвижни части. Да не се държи главата на пробника по време на движения, или при ръчна смяна на пробника.

Препоръчва се защита на очите във всички приложения, включващи използване на машини или CMM.

Пазете се от неочаквано движение. Потребителят трябва да остава извън пълния работен обсег на комбинациите глава на пробника / удължител / пробник.

Преди извършване на всякакви операции по поддръжката да се изключва захранването.

За инструкции по отношение безопасното почистване на продуктите Renishaw, вж. раздел ПОДДРЪЖКА в съответната документация на продукта.

Отговорност на доставчика на машината е да гарантира, че на потребителя са обяснени всякакви рискове по време на работа, включително онези, упоменати в документацията на продуктите Renishaw и да гарантира осигуряване на съответни предпазители и обезопасителни блокировки.

CS - Upozornění ACR3

Mezi pohyblivými součástmi a mezi pohyblivými a statickými součástmi hrozí nebezpečí přiskřípnutí. Při přesunování nebo ručním nastavování nedržte snímací hlavici.

Při jakékoli práci s obráběcími stroji nebo souřadnicovými měřicími stroji (CMM) je doporučeno používat ochranu očí.

Dejte pozor na nečekaný pohyb stroje. Uživatel by se měl zdržovat mimo pracovní rozsah stroje, zejména mimo místa pohybu snímací hlavy, prodloužení (nástavce) a sondy.

Před započetím jakékoliv údržby zařízení odpojte napájení.

Pokyny týkající se bezpečného čištění produktů společnosti Renishaw naleznete v části Údržba v dokumentaci k příslušnému produktu.

Povinností dodavatele stroje je informovat uživatele o nebezpečích spojených s provozem i o nebezpečích zmiňovaných v dokumentaci k produktům společnosti Renishaw a zajistit dostatečné ochranné a bezpečnostní prostředky.

042-482-0621 / master@admt.kr

문의 사항은 www.admt.kr 로 연락 부탁 드리겠습니다.

DA - ACR3 advarsler

Der er risiko for at blive klemt mellem bevægelige dele og mellem bevægelige og statiske dele. Hold ikke på sondehovedet under bevægelse eller ved manuelle sondeskift.

I alle tilfælde, hvor der anvendes værktøjs- og koordinatmålemaskiner, anbefales det at bære beskyttelsesbriller.

Pas på uventede bevægelser. Brugeren bør holde sig uden for hele probehovedets/forlængerens/probekombinationernes arbejdsområde.

Afbryd strømforsyningen, før der foretages vedligeholdelse.

Se afsnittet MAINTENANCE (VEDLIGEHOLDELSE) i produktdokumentationen for at få instruktioner til sikker rengøring af Renishawprodukter.

Det er maskinleverandørens ansvar at sikre, at brugeren er bekendt med eventuelle risici i forbindelse med driften, herunder de risici, som er nævnt i Renishaws produktdokumentation, og at sikre, at der er tilstrækkelig afskærmning af sikkerhedsblokeringer.

DE - ACR3 Warnungen

Zwischen zwei beweglichen und zwischen beweglichen und statischen Teilen besteht Einklemmgefahr. Der Messtasterkopf darf während des Betriebs oder eines manuellen Messtasterwechsels nicht festgehalten werden.

Bei Arbeiten an Werkzeugmaschinen oder Koordinatenmessgeräten wird Augenschutz empfohlen.

Achten Sie auf unerwartete Bewegungen. Der Anwender darf sich nur außerhalb des Messtaster-Arbeitsbereichs aufhalten.

Bevor Wartungsarbeiten begonnen werden, muss die Stromversorgung getrennt werden.

Anleitungen zur sicheren Reinigung von Renishaw Produkten sind im Kapitel WARTUNG in der Produktdokumentation enthalten.

Es obliegt dem Maschinenlieferanten, den Anwender über alle Gefahren, die sich aus dem Betrieb der Ausrüstung, einschließlich jener, die in der Renishaw Produktdokumentation erwähnt sind, zu unterrichten und sicherzustellen, dass ausreichende Schutzvorrichtungen und Sicherheitsverriegelungen realisiert sind.

ES - Avisos ACR3

Existe el peligro de atraparse los dedos entre las distintas partes móviles y entre partes móviles e inmóviles. No agarre el cabezal de la sonda durante los movimientos ni durante las cambios manuales de la sonda.

Se recomienda usar gafas de protección en todas las aplicaciones que implican el uso de Máquinas-Herramienta y máquinas de medición de coordenadas.

Tenga cuidado con los movimientos inesperados. El usuario debe permanecer fuera del área total de trabajo de las combinaciones de cabezal de sonda/extensión/sonda.

Quite la corriente antes de emprender cualquier operación de mantenimiento.

Para obtener instrucciones relacionadas con la limpieza segura de los productos de Renishaw, consulte la sección de Mantenimiento de la documentación del producto correspondiente.

Es responsabilidad del proveedor de la máquina garantizar que el operario sea informado sobre los peligros relacionados con el funcionamiento, incluidos los peligros mencionados en la documentación de los productos Renishaw, y garantizar que se suministran los dispositivos de protección y seguridad adecuados.

042-482-0621 / master@admt.kr

문의 사항은 www.admt.kr 로 연락 부탁 드리겠습니다.

ET - ACR3 hoiatused

Muljumisoht eksisteerib masina liikuvate ning liikuvate ja liikumatute osade vahel. Ärge hoidke masina liikumise ajal või sondi käsitsi vahetamise ajal sondipeast kinni.

Kõikide rakenduste puhul, mis kasutavad tööpinke või koordinaatmõõtemasinaid, on soovitav kasutada kaitseprille.

Olge ettevaatlik ootamatute liikumiste suhtes. Kasutaja peab jääma väljapoole kogu sondi pea/laienduse/sondi kombinatsiooni tööpiirkonda.

Enne hooldustööde tegemist ühendage seade toiteallikast lahti.

Renishaw' toodete ohutu puhastamise juhised on toodud vastava toote dokumentatsioonis jaotises „Hooldus“.

Masina tarnija peab vastutama, et kasutaja oleks teadlik mis tahes tööga seotud ohtudest, sealhulgas Renishaw' toote dokumentatsioonis märgitutest, ja peab tagama piisavad ettevaatusabinõud ja ohutusblokeeringud.

FI - ACR3-varoitukset

Liikkuvien osien ja staattisten osien välillä on litistymisvaara. Älä pidä kiinni mittapäästä sen liikkuessa tai vaihtaessasi anturia käsin.

Silmänsuojainten käyttö on suositeltavaa kaikkia työstökoneita ja koordinoituja mittauskoneita (CMM) käytettäessä.

Varo odottamatonta liikettä. Käyttäjien on pysyteltävä mittapään, jatkeen ja anturin yhdistelmän toiminta-alueen ulkopuolella.

Katkaise virta ennen huoltotoimenpiteiden suorittamista.

Renishaw-tuotteiden turvalliset puhdistusohjeet löytyvät tuotedokumentaation Maintenance (Huolto) -kohdasta.

Laitteen toimittajan vastuulla on varmistaa, että käyttäjä on tietoinen laitteen käyttöön liittyvistä vaaratekijöistä, mukaan lukien Renishaw'n tuotedokumenteissa mainitut vaaratekijät, ja varmistaa, että asiakas saa asianmukaiset suojalaitteet ja varmistimet.

FR - Avertissements ACR3

L'effet de pincement dû au mouvement des pièces mobiles entre elles ou avec des pièces fixes présente des dangers. Ne pas tenir la tête du palpeur lorsqu'elle se déplace ou lors du chargement manuel du palpeur.

Le port de lunettes de protection est recommandé pour toute application sur machine-outil ou MMT.

Attention aux mouvements impromptus. L'utilisateur doit toujours rester en dehors de toute la zone de travail des installations multiples tête/allonge/palpeur.

Mettre la machine hors tension avant d'entreprendre toute opération de maintenance.

Les conseils de nettoyage en toute sécurité des produits Renishaw figurent dans les consignes de maintenance de votre documentation.

Il incombe au fournisseur de la machine de veiller à ce que l'utilisateur prenne connaissance des dangers d'exploitation, y compris ceux décrits dans la documentation du produit Renishaw, et de s'assurer que des protections et verrouillages de sûreté adéquats sont prévus.

042-482-0621 / master@admt.kr

문의 사항은 www.admt.kr 로 연락 부탁 드리겠습니다.

GA - Rabhaidh ACR3

Tá guaiseacha cúngúcháin ann idir páirteanna atá ag gluaiseacht agus idir páirteanna atá ag gluaiseacht agus páirteanna statacha. Ná coinnigh greim ar cheann an tóireadóra le linn gluaiseachtaí, nó nuair a bhíonn tóireadóir á athrú de láimh.

Moltar cosaint do na súile i ngach aon fheidhmiú lena mbaineann úsáid uirlisí meaisín nó CMM.

Fainic an chorraíl gan choinne. Ba cheart don úsáideoir fanacht lasmuigh de chlúdach iomlán oibre Cheann an Tóireadóra/an tSínte/Chumaisc an Tóireadóra.

Bain an chumhacht de sula ndéantar aon oibríochtaí cothabhála.

Do threoracha maidir le glantóireacht shábháilte na dtáirgí Renishaw, tagair do rannóg Cothabhála i gcáipéisíocht ábhartha an táirge.

Tá freagracht ag soláthraí an mheaisín a áirithiú go dtugtar le fios don úsáideoir na guaiseacha a bhaineann leis an oibriúchán, lena n-áirítear iad sin a luaitear i ndoiciméadú táirgí Renishaw, agus a áirithiú go soláthraítear comhghlasáil agus cibé cosaint leordhóthanach eile atá riachtanach.

GR - Προειδοποιήσεις του ACR3

Υπάρχει κίνδυνος συμπίεσης μεταξύ κινούμενων μερών καθώς και μεταξύ κινούμενων και στατικών μερών. Δεν πρέπει να κρατάτε την κεφαλή του ανιχνευτή κατά την κίνηση ούτε κατά τη διάρκεια χειροκίνητων αλλαγών του ανιχνευτή.

Σε όλες τις εφαρμογές που συνεπάγονται τη χρήση εργαλείων μηχανημάτων και εξαρτημάτων CMM, συνιστάται η χρήση συσκευής προστασίας των ματιών.

Προσέξτε τις ξαφνικές κινήσεις. Ο χρήστης πρέπει να παραμένει εκτός του χώρου που επηρεάζεται από όλους τους συνδυασμούς λειτουργίας της κεφαλής του αισθητήρα, της προέκτασης και του αισθητήρα.

Αποσυνδέστε το μηχάνημα από το ηλεκτρικό ρεύμα πριν επιχειρήσετε οποιεσδήποτε εργασίες συντήρησης.

Για οδηγίες σχετικά με τον ασφαλή καθαρισμό των προϊόντων Renishaw, ανατρέξτε στην ενότητα Συντήρηση του έντυπου συνοδευτικού υλικού του αντίστοιχου προϊόντος.

Αποτελεί ευθύνη του προμηθευτή του μηχανήματος να εξασφαλίσει ότι ο χρήστης είναι ενήμερος τυχόν κινδύνων που συνεπάγεται η λειτουργία, συμπεριλαμβανομένων όσων αναφέρονται στο έντυπο συνοδευτικό υλικό των προϊόντων της Renishaw. Είναι επίσης ευθύνη του να εξασφαλίσει ότι υπάρχουν τα απαιτούμενα προστατευτικά καλύμματα και διακόπτες ασφάλειας.

042-482-0621 / master@admt.kr

문의 사항은 www.admt.kr 로 연락 부탁 드리겠습니다.

HR - ACR3 uozorenja

Između dijelova u pokretu i između pokretnih i statičkih dijelova postoji opasnost od uklještenja. Tijekom pomicanja ili ručnih zamjena sondi, nemojte držati glavu sonde.

Kod svih primjena koje uključuju upotrebu alatnih strojeva ili CMM-ova preporučuje se zaštita očiju.

Budite oprezni zbog mogućnosti neočekivanog pomicanja. Korisnik treba ostati izvan punog radnog dometa kombinacija glave sonde/produžetka/sonde.

Isključite napajanje prije provođenja bilo kakvih radova održavanja.

Za upute o sigurnom čišćenju proizvoda Renishaw proučite odlomak o održavanju u odgovarajućoj dokumentaciji proizvoda.

Dobavljač stroja dužan je osigurati da korisnik bude upozoren na sve opasnosti tijekom rada, uključujući one navedene u dokumentaciji proizvoda Renishaw, te mora osigurati odgovarajuće zaštite i sigurnosne blokade.

HU - ACR3 figyelmeztetések

A mozgó alkatrészek, illetve a mozgó és álló alkatrészek között becsípődés veszélye áll fenn. A tapintófejet ne fogja meg mozgás vagy a tapintófej manuális cseréje közben.

Szerszámgépek és koordináta-mérőgépek használata során mindig javasolt a szemvédő viselése.

Legyen óvatos a nem várt mozgások tekintetében. Tartózkodjon a tapintófej/hosszabbító/tapintó kombináció teljes mozgáskörzetén kívül!

Karbantartási munkák előtt mindig áramtalanítsa a gépet.

A Renishaw szerszámgépek biztonságos tisztítására vonatkozó előírásokat megtalálja a megfelelő termékismertető Karbantartás című fejezetében.

A gép szállítója felelős azért, hogy felhívja a felhasználó figyelmét az üzemeltetéssel kapcsolatos veszélyforrásokra, beleértve a Renishaw termékdokumentációjában ismertetetteket is. Továbbá gondoskodnia kell a megfelelő védőburkolatok és biztonsági reteszelések meglétéről is.

IT - Avvertenze per ACR3

Esiste pericolo di danno da schiacciamento tra le parti in moto o tra le parti in moto e quelle ferme. Evitare di afferrare la testina della sonda quando è in moto, o durante le sostituzioni manuali della sonda.

Si raccomanda di indossare occhiali di protezione in applicazioni che comportano l'utilizzo di macchine utensili o macchine CMM.

Fare attenzione ai movimenti improvvisi. Si raccomanda all'utente di tenersi al di fuori dello spazio operativo della testa della sonda, delle prolunghe e di altri accessori della sonda.

Prima di effettuare qualsiasi intervento di manutenzione, togliere la rete di alimentazione.

Per le istruzioni relative alla pulizia dei prodotti Renishaw, fare riferimento alla sezione Manutenzione della documentazione del prodotto.

Il fornitore della macchina ha la responsabilità di avvertire l'utente dei pericoli inerenti al funzionamento della stessa, compresi quelli riportati nelle istruzioni di Renishaw, e di fornire dispositivi di protezione e interruttori di esclusione adeguati.

042-482-0621 / master@admt.kr

문의 사항은 www.admt.kr 로 연락 부탁 드리겠습니다.

JA - ACR3 に関する警告

可動部の間または可動部と固定部の間に指などが挟まれる危険があります。移動中または手動プローブ交換中は、プローブヘッドを手で持たないようにしてください。

工作機械や三次元測定機を使用する場合は、保護眼鏡の着用を推奨します。

予想外の動作に注意してください。プローブシステムの可動範囲内に入らないでください。

メンテナンス作業を行う前には必ず、電源を切ってください。

レニショー製品を清掃する場合は、関連する製品の説明書のメンテナンスに関するセクションを参照してください。

レニショーの製品説明書に記載されている内容も含め、操作に伴うあらゆる危険性をユーザーへ周知してください。また、適切な保護機構とインターロックシステムの設置は、各工作機械メーカーの責任で行なってください。

LT - ACR3 įspėjimai

Tarp judančių detalių bei tarp judančių ir statiškų detalių pakliuvę objektai gali būti suspausti. Nelaikykite zondo galvutės judant įrenginiui ar keisdami zondą rankiniu būdu.

Atliekant visus darbus, kai naudojami įrenginio įrankiai, įrenginys valomas ir prižiūrimas, rekomenduojama užsidėti apsauginius akinius.

Saugokitės netikėtų judesių. Naudotojui nerekomenduojama atidaryti veikiančios zondo galvutės / ilgintuvo / zondų junginio gaubto.

Prieš atlikdami techninę priežiūrą, išjunkite elektros srovės tiekimą.

„Renishaw“ gaminių saugaus valymo instrukcijas rasite atitinkamo gaminio dokumentuose „Priežiūros“ skyriuje.

Įrenginio tiekėjas atsako už tai, kad naudotojas būtų įspėtas apie pavojus, susijusius su įrenginio naudojimu, taip pat pavojus, minimus „Renishaw“ prietaiso techniniuose dokumentuose, kad būtų sumontuoti atitinkami saugos įrenginiai bei blokuotės.

LV - ACR3 brīdinājumi

Pastāv risks tikt saspiestam starp kustīgajām daļām, kā arī starp kustīgajām un nekustīgajām daļām. Neturiet zondes galviņu kustības laikā vai veicot zondes nomaiņu manuāli.

Izmantojot darba iekārtas vai koordinātu mērīšanas ierīces, ieteicams izmantot acu aizsarglīdzekļus.

Uzmanieties no nejaušām kustībām. Lietotājam jāpaliek ārpus kontaktmērgalviņas/uzgaļa/zondes pilna darbības rādiusa.

Atvienojiet izstrādājumu no strāvas pirms jebkuru apkopes darbu veikšanas.

Lai uzzinātu par drošu „Renishaw“ izstrādājumu tīrīšanu, attiecīgā izstrādājuma dokumentācijā izlasiet apkopes sadaļu.

Iekārtas piegādātājs atbild par to, lai lietotājs tiktu iepazīstināts ar jebkuriem draudiem, kas saistīti ar tās darbību (ieskaitot tos, kas minēti „Renishaw“ izstrādājuma dokumentācijā), un lai būtu nodrošinātas atbilstošas aizsargierīces un aizsargbloķētāji.

042-482-0621 / master@admt.kr

문의 사항은 www.admt.kr 로 연락 부탁 드리겠습니다.

MT - Twissijiet dwar ACR3

Jeżistu perikli li persuna tinqaras bejn il-partijiet li jkunu jiċċaqilqu u l-partijiet statiċi. Iżżommx ir-ras tas-sonda waqt il-movimenti, jew waqt li tkun qed tibdel is-sonda manwalment.

Fix-xogħol kollu li jinvolvi l-użu ta' għodda tal-magni jew CMMs, il-protezzjoni tal-għajnejn hi rakkomandata.

Oqgħod attent għal moviment mhux mistenni. L-utent għandu jibqa' barra ż-żona kollha tal-operat tal-kombinazzjonijiet tar-Ras tas-Sonda/Estensjoni/Sonda.

Itfi d-dawl qabel tibda tagħmel xi xogħol ta' manutenzjoni.

Għal istruzzjonijiet dwar it-tindif bla periklu tal-prodotti Renishaw, irreferi għall-informazzjoni dwar il-Manutenzjoni fid-dokumentazzjoni tal-prodott rilevanti.

Hi r-responsabbiltà tal-fornitur tal-magna li jiżgura li l-utent ikun konxju dwar kwalunkwe perikli involuti fit-tħaddim, inklużi dawk imsemmija fid-dokumentazzjoni tal-prodotti Renishaw, u li jiżgura li jkun hemm protezzjoni u l-interlocks tas-sigurtà adegwati pprovduti.

NL - ACR3-waarschuwingen

Er is risico op inklemming tussen de bewegende onderdelen onderling en tussen bewegende en niet bewegende onderdelen. Houd de tasterkop niet vast als de machine in werking is of bij het handmatig verwisselen van een taster.

Voor alle toepassingen waarbij bewerkingsmachines of CMM's worden gebruikt, wordt het dragen van een veiligheidsbril aanbevolen.

Pas op voor onverwachte bewegingen. De gebruiker dient buiten het werkbereik van de combinatie tasterkop/verlengstuk/meettaster te blijven.

Schakel de stroom uit, voordat u onderhoudwerkzaamheden verricht.

Voor het veilig reinigen van Renishaw producten wordt verwezen naar het hoofdstuk Onderhoud in de bijbehorende productdocumentatie.

De machineleverancier dient ervoor te zorgen dat de gebruiker de risico's kent die verbonden zijn aan het gebruik, inclusief de risico's vermeld in Renishaws productdocumentatie, en dat er voldoende afschermingen en veiligheidsschakelaars aanwezig zijn.

PL - Ostrzeżenia dotyczące ACR3

Występuje niebezpieczeństwo zakleszczenia pomiędzy częściami ruchomymi oraz częściami ruchomymi i nieruchomymi. Nie wolno trzymać głowicy sondy podczas ruchów i między częściami ruchomymi i nieruchomymi.

Podczas obsługi obrabiarek lub maszyn współrzędnościowych zaleca się stosowanie osłon na oczy.

Należy wystrzegać się nieskoordynowanych ruchów. Użytkownik powinien pozostawać poza pełną strefą roboczą kombinacji głowicy sondy/przedłużacza/sondy.

Przed przystąpieniem do jakichkolwiek czynności konserwacyjnych należy odłączyć zasilanie energią elektryczną.

Instrukcje dotyczące bezpiecznego czyszczenia produktów Renishaw znajdują się w części Konserwacja, w dokumentacji danego produktu.

Obowiązkiem dostawcy maszyny jest poinformowanie użytkownika o wszelkich zagrożeniach związanych z obsługą, w tym wymienionych w dokumentacji produktu Renishaw, oraz zapewnienie odpowiednich zabezpieczeń i blokad bezpieczeństwa.

042-482-0621 / master@admt.kr

문의 사항은 www.admt.kr 로 연락 부탁 드리겠습니다.

PT - Avisos ACR3

Risco de beliscadura entre as peças em movimento e entre estas e as estáticas. Não segure a cabeça da sonda durante movimentos nem mudanças manuais sonda.

Recomenda-se a utilização de proteção ocular em todas as aplicações que envolvam a utilização de ferramentas de máquinas ou o CMM.

Tenha em atenção movimentos inesperados. O utilizador tem de permanecer afastado das combinações cabeça da sonda/extensão/sonda que estão em pleno funcionamento.

Desligue a alimentação antes de realizar quaisquer operações de manutenção.

Para obter instruções relativamente à limpeza segura dos produtos Renishaw, consulte a secção Manutenção da documentação relevante do produto.

É da responsabilidade do fornecedor da máquina assegurar que o utilizador tem conhecimento de quaisquer perigos envolvidos no funcionamento, incluindo os mencionados na documentação do produto da Renishaw, e garantir que são fornecidas proteções e bloqueios de segurança.

RO - Avertismente ACR3

Există riscul prinderii pielii atât între piesele în mişcare cât şi între piesele în mişcare şi cele fixe. Nu ţineţi de capul palpatorului în timpul deplasării acestuia sau în timpul schimbării manuale a palpatorului propriu-zis.

În toate aplicaţiile care presupun utilizarea maşinilor unelte sau a MMC, se recomandă protejarea ochilor.

Atenţie la deplasările neaşteptate. Operatorul trebuie să rămână complet în afara zonei de acţiune a ansamblului cap palpator/prelungitor/palpator în combinații.

Înaintea executării oricăror operaţii de întreţinere, scoateţi echipamentul de sub tensiune.

Pentru instrucţiuni referitoare la curăţirea în siguranţă a produselor Renishaw, vezi capitolul Întreţinere al documentaţiei fiecărui produs implicat.

Este responsabilitatea furnizorului să se asigure că utilizatorul a fost înştiinţat asupra oricărui pericol implicat de utilizarea echipamentului, inclusiv asupra pericolelor menţionate în documentaţia produsului Renishaw, şi de asemenea să se asigure că au fost prevăzute protecţii şi interblocări adecvate.

042-482-0621 / master@admt.kr

문의 사항은 www.admt.kr 로 연락 부탁 드리겠습니다.

SK - Varovania ohľadom ACR3

Medzi pohyblivými časťami a medzi pohyblivými a statickými časťami vzniká riziko pomliaždenia. V priebehu pohybu či manuálnej výmeny sondy nedržte hlavicu sondy.

Vo všetkých aplikáciách zahŕňajúcich používanie obrábacích strojov alebo súradnicových meracích prístrojov sa odporúča ochrana očí.

Dávajte pozor na neočakávaný pohyb. Používateľ by mal zostávať mimo plne funkčnej schránky hlavice sondy / prídavnej časti / kombinácií sondy.

Pred každým vykonávaním údržby odpojte napájanie.

Pokyny ohľadom bezpečného čistenia produktov Renishaw nájdete v dokumentácii príslušného produktu v časti Údržba.

Zodpovednosťou dodávateľa stroja je zaručiť oboznámenie používateľa so všetkými rizikami súvisiacimi s prevádzkou vrátane tých, ktoré sú uvedené v dokumentácii k výrobku spoločnosti Renishaw, a zaručiť poskytnutie adekvátnych zábran a bezpečnostných blokovacích poistiek.

SL - Opozorila ACR3

Nevarnost stiska med premikajočimi se deli oziroma med premikajočimi se in statičnimi deli. Ne držite merilne glave med premiki ali ko ročno menjavate glavo.

Pri vsaki uporabi obdelovalnih strojev ali koordinatnih merilnih strojev priporočamo uporabo zaščitnih očal.

Bodite pozorni na nepričakovane premike. Zadržujte se zunaj delovnega območja sonde/podaljška/merilne glave.

Pred začetkom vzdrževanja stroj izklopite iz električnega omrežja.

O varnem čiščenju izdelkov Renishaw si preberite razdelek vzdrževanja v pripadajoči dokumentaciji.

Odgovornost dobavitelja stroja je, da uporabnika opozori na vse nevarnosti pri delovanju, tudi na tiste, ki so navedene v dokumentaciji Renishaw, in da zagotovi vsa potrebna varovala in varnostne zapore.

SV - Varningar om ACR3

Det finns risk för klämning mellan rörliga delar och mellan rörliga och stillastående delar. Håll ej i sondens huvud under rörelse eller under manuella sondbyten.

Ögonskydd rekommenderas för alla tillämpningar, där verktygsmaskiner eller koordinatmätmaskiner används.

Se upp för plötsliga rörelser. Användaren måste befinna sig utanför arbetsområdet för alla kombinationer av sondhuvud/förlängning/sond.

Koppla bort strömmen innan underhåll utförs.

För instruktioner angående säker rengöring av Renishaws produkter, se avsnittet MAINTENANCE (UNDERHÅLL) i produktdokumentationen.

Maskinleverantören ansvarar för att användaren blir informerad om de risker som drift innebär, inklusive de som nämns i Renishaws produktdokumentation, samt att tillräckliga skydd och säkerhetsförreglingar tillhandahålls.

ZH-TW - ACR3警告

行走移動零件之間以及行走移動零件與靜止零件之間存在夾傷的危險。在移動時或手工更換測頭座時，切勿握住測頭。

042-482-0621 / master@admt.kr

문의 사항은 www.admt.kr 로 연락 부탁 드리겠습니다.

在所有涉及使用工具機或三次元量床的應用中，建議要有眼睛保護措施。

謹防意外移動。使用者位置應保持在測頭座／延長桿／測頭組合件的整個工作包覆面以外。

執行任何維修工作前，請先關閉總電源。

有關 Renishaw 公司產品的安全清潔指示，請參閱相關產品說明書的「維護」章節。

機器供應商有責任確保使用者在操作的環境中知道任何可能的危險狀況、包括那些標示在 Renishaw 產品使用說明中的狀況並確保提供足夠安全護具和安全互鎖裝置。

www.admt.kr

042-482-0621 / master@admt.kr

문의 사항은 www.admt.kr 로 연락 부탁 드리겠습니다.

ZH - ACR3警告

运动部件之间以及运动部件与静止部件之间存在夹伤危险。在移动时或手工更换测头座时，切勿握住测头。

在所有涉及使用机床或坐标测量机 (CMM) 的应用中，建议采取保护眼睛的措施。

谨防意外移动。用户应该保持在测头座/加长杆/测头组合件的整个工作包络面以外。

在执行任何维护作业之前，请先断开电源。

有关雷尼绍公司产品的安全清洁的指示，请参阅相关产品说明书的"维护"章节。

机床制造商有责任确保用户了解操作中存在的任何危险（包括雷尼绍产品文件中提到的危险），并应确保提供充分的防护装置和安全联锁装置。

www.admt.kr

042-482-0621 / master@admt.kr

문의 사항은 www.admt.kr 로 연락 부탁 드리겠습니다.

Renishaw plc
New Mills, Wotton-under-Edge
Gloucestershire, GL12 8JR
United Kingdom

T +44 (0)1453 524524
F +44 (0)1453 524901

www.renishaw.com/cmmsupport

RENISHAW
apply innovation™

www.admt.kr

For worldwide contact details, please visit our main website at www.renishaw.com/contact

Issued 02 2025

042-482-0621 / master@admt.kr