문의 사항은 www.admt.kr 로 연락 부탁 드리겠습니다.

TP20 user's guide

Document part number H-1000-5008-06-D



www.admt.kr

042-482-0621 / master@admt.kr

문의 사항은 www.admt.kr 로 연락 부탁 드리겠습니다.

TP20 general information

© 1998 - 2024 Renishaw plc. All rights reserved.

ORIGINAL LANGUAGE VERSION

This document may not be copied or reproduced in whole or in part, or transferred to any other media or language by any means, without the prior written permission of Renishaw.

Disclaimer

WHILE CONSIDERABLE EFFORT WAS MADE TO VERIFY THE ACCURACY OF THIS DOCUMENT AT PUBLICATION, ALL WARRANTIES, CONDITIONS, REPRESENTATIONS AND LIABILITY, HOWSOEVER ARISING, ARE EXCLUDED TO THE EXTENT PERMITTED BY LAW.

RENISHAW RESERVES THE RIGHT TO MAKE CHANGES TO THIS DOCUMENT AND TO THE EQUIPMENT, AND/OR SOFTWARE AND THE SPECIFICATION DESCRIBED HEREIN WITHOUT OBLIGATION TO PROVIDE NOTICE OF SUCH CHANGES.

Trade marks

RENISHAW®, the probe symbol and REVO® are registered trade marks of Renishaw plc.

Renishaw product names, designations and the mark 'apply innovation' are trade marks of Renishaw plc or its subsidiaries.

Other brand, product or company names are trade marks of their respective owners.

WEEE



The use of this symbol on Renishaw products and / or accompanying documentation indicates that the product should not be mixed with general household waste upon disposal. It is the responsibility of the end user to dispose of this product at a designated collection point for waste electrical and electronic equipment (WEEE) to enable reuse or recycling. Correct disposal of this product will help to save valuable resources and prevent potential negative effects on the environment. For more information, please contact your local waste disposal service or Renishaw distributor.

Warranty

Unless you and Renishaw have agreed and signed a separate written agreement, the equipment and/or software are sold subject to the Renishaw Standard Terms and Conditions supplied with such equipment and/or software, or available on request from your local Renishaw office.

Renishaw warrants its equipment and software for a limited period (as set out in the Standard Terms and Conditions), provided that they are installed and used exactly as defined in associated Renishaw documentation. You should consult these Standard Terms and Conditions to find out the full details of your warranty.

Equipment and/or software purchased by you from a third-party supplier is subject to separate terms and conditions supplied with such equipment and/or software. You should contact your third-party supplier for details.

042-482-0621 / master@admt.kr

문의 사항은 www.admt.kr 로 연락 부탁 드리겠습니다.

Care of equipment

Renishaw probes and associated systems are precision tools used for obtaining precise measurements and must therefore be treated with care.

Changes to Renishaw products

Renishaw reserves the right to improve, change or modify its hardware or software without incurring any obligations to make changes to Renishaw equipment previously sold.

Company registration details

Renishaw plc. Registered in England and Wales. Company no: 1106260. Registered office: New Mills, Wotton-under-Edge, Gloucestershire, GL12 8JR, UK.

Packaging

To aid end user recycling and disposal the materials used in the different components of the packaging are stated here:

Packaging component	Material	94/62/EC code	94/62/EC number
Outer box	Non-corrugated fibreboard	PAP	21
Box	Polypropylene	PP	05
Packing foam	Low density polyethylene	LDPE	04
Insert	Polypropylene	PP	05

CAUTION: If it is necessary to return any part of the system please ensure it is packaged carefully. Failure to do so could result in transit damage for which the customer would be liable. Products supplied in plastic boxes must be returned in the original packaging.

042-482-0621 / master@admt.kr

문의 사항은 www.admt.kr 로 연락 부탁 드리겠습니다.

TP20 product compliance

EU declaration of conformity

Contact Renishaw plc or visit www.renishaw.com/EUCMM for the full EU declaration.

UK declaration of conformity

Contact Renishaw plc or visit www.renishaw.com/UKCMM for the full UK declaration.

EMC conformity

This equipment must be installed and used in accordance with this installation guide. This product is intended for industrial use only and should not be used in a residential area or connected to a low voltage power supply network which supplies buildings used for residential purposes.

ICES-001 (Canada only)

This ISM device complies with Canadian ICES-001(A) / NMB-001(A).

Cet appareil ISM est conforme à la norme ICES-001(A) / NMB001(A) du Canada.

REACH regulation

Information required by Article 33(1) of Regulation (EC) No. 1907/2006 (“REACH”) relating to products containing substances of very high concern (SVHCs) is available at:

www.renishaw.com/REACH

042-482-0621 / master@admt.kr

문의 사항은 www.admt.kr 로 연락 부탁 드리겠습니다.

China RoHS

Contact Renishaw plc or visit www.renishaw.com/ChinaRoHSCMM for the full China RoHS tabulation.



www.admt.kr

042-482-0621 / master@admt.kr

문의 사항은 www.admt.kr 로 연락 부탁 드리겠습니다.

TP20 warnings

The use of eye protection is recommended. Pinch hazards exist between parts and between moving and static parts. Beware of unexpected movement. You should remain outside the full working envelope of probe head / extension bar / probe combinations.

It is the machine supplier's responsibility to ensure that the user is made aware of any hazards involved in operation, including those mentioned in Renishaw product documentation, and to ensure that adequate guards and safety interlocks are provided.

Under certain circumstances, the probe signal may falsely indicate a probe seated condition. Do not rely on probe signals to stop the machine.

Limitations of use

CAUTION: One option of the TP20 probe system uses a magnetically-actuated inhibit system. It is important to apply the following limitations when using the inhibit version TP20. Neglecting to do so may result in failure of the probe to trigger.

1. The inhibit TP20 may not be armed at a distance of up to 100 mm from the front of the MCR20 probe module change rack.
2. Do not use the inhibit TP20 to gauge magnetised parts or parts held in magnetic fixtures.
3. Do not use the Renishaw PE series extension bars with the inhibit TP20 unless they have been fully de-magnetised. In all these instances the use of the non-inhibit TP20 probe body will ensure that the probe system operates fully.

CAUTION: The TP20 non-inhibit probe can only be used for automatic stylus changing using the MCR20 probe module change rack when the probe inhibit is controlled by the CMM. In the case of any uncertainty, do not attempt to perform automatic stylus changing with a TP20 non-inhibit probe and an MCR20 until the CMM supplier has checked the CMM for compliance to this requirement.

www.admt.kr

042-482-0621 / master@admt.kr

문의 사항은 www.admt.kr 로 연락 부탁 드리겠습니다.

TP20 introduction

This installation and user's guide supports the following Renishaw products:

- TP20 touch-trigger probe system which includes the probe body and probe module (inhibit and non-inhibit versions)
- MCR20 probe module change rack (automatic operation)
- TCR20 probe module change rack (automatic operation)

The Renishaw TP20 touch-trigger probe is a 5-way or 6-way kinematic probe with the facility to change stylus configurations without the need for re-qualification. A direct replacement for the industry-proven Renishaw TP2, the TP20 can be easily retrofitted into existing TP2 applications to bring this additional facility to both manual and DCC co-ordinate measuring machines (CMMs).

The TP20 comprises a two-piece design – a probe body (with or without magnetic actuation device) and detachable probe modules. TP20 probe modules can be stored in the MCR20 where automatic changing of the probe module(s) is possible under measurement program control. The TCR20 rack should be used for TP20 probe module changing with a PH20 system.

Forming part of Renishaw's comprehensive CMM touch-trigger probe range, the TP20 is fully compatible with all Renishaw M8 probe heads, including those fitted with the Renishaw autojoint incorporating Renishaw's PAA range of adaptors and extension bars. Wherever necessary, probe reach may be increased in M8 applications by use of the Renishaw PEL range of extension bars.

Further information on these products may be obtained from Renishaw's website.



042-482-0621 / master@admt.kr

문의 사항은 www.admt.kr 로 연락 부탁 드리겠습니다.

TP20 touch-trigger probe kit

The standard Renishaw TP20 touch-trigger probe kit (see following figure) comprises the following primary components:

- One TP20 probe body
- One or two TP20 probe modules (see TP20 probe kits for available combinations)
- Probe and stylus tools

TP20 probe body

The probe body incorporates a standard Renishaw M8 × 1.25 mm screw connector mount and is designed to house the mating half of the probe module's kinematic coupling.

TP20 inhibit probe body

This contains the magnetic proximity switch necessary to inhibit triggering of the probe during automatic changing of the probe modules.

TP20 non-inhibit probe body

This probe body does not include the magnetic proximity switch and so can be used for any application, including those where strong magnetic fields are present.





042-482-0621 / master@admt.kr

문의 사항은 www.admt.kr 로 연락 부탁 드리겠습니다.

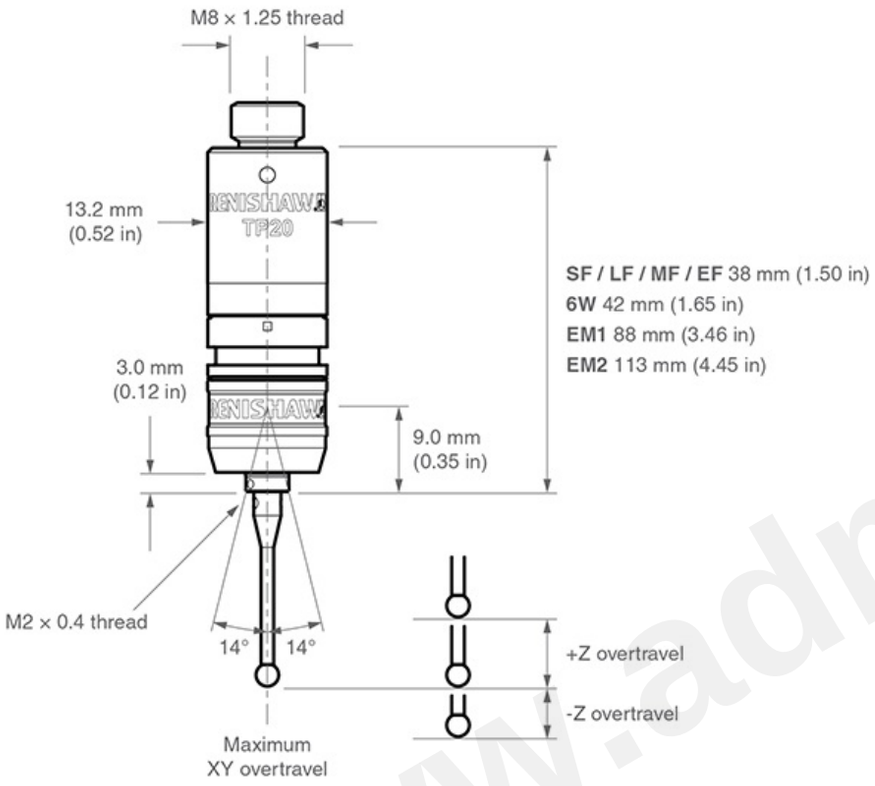

+Z overtravel
SF / EM1 / EM2 4.0 mm (0.16 in)
MF 3.1 mm (0.12 in)
EF 2.4 mm (0.09 in)
6W 4.5 mm (0.18 in)

-Z overtravel
6W 1.5 mm (0.06 in)

www.admt.kr

042-482-0621 / master@admt.kr

문의 사항은 www.admt.kr 로 연락 부탁 드리겠습니다.

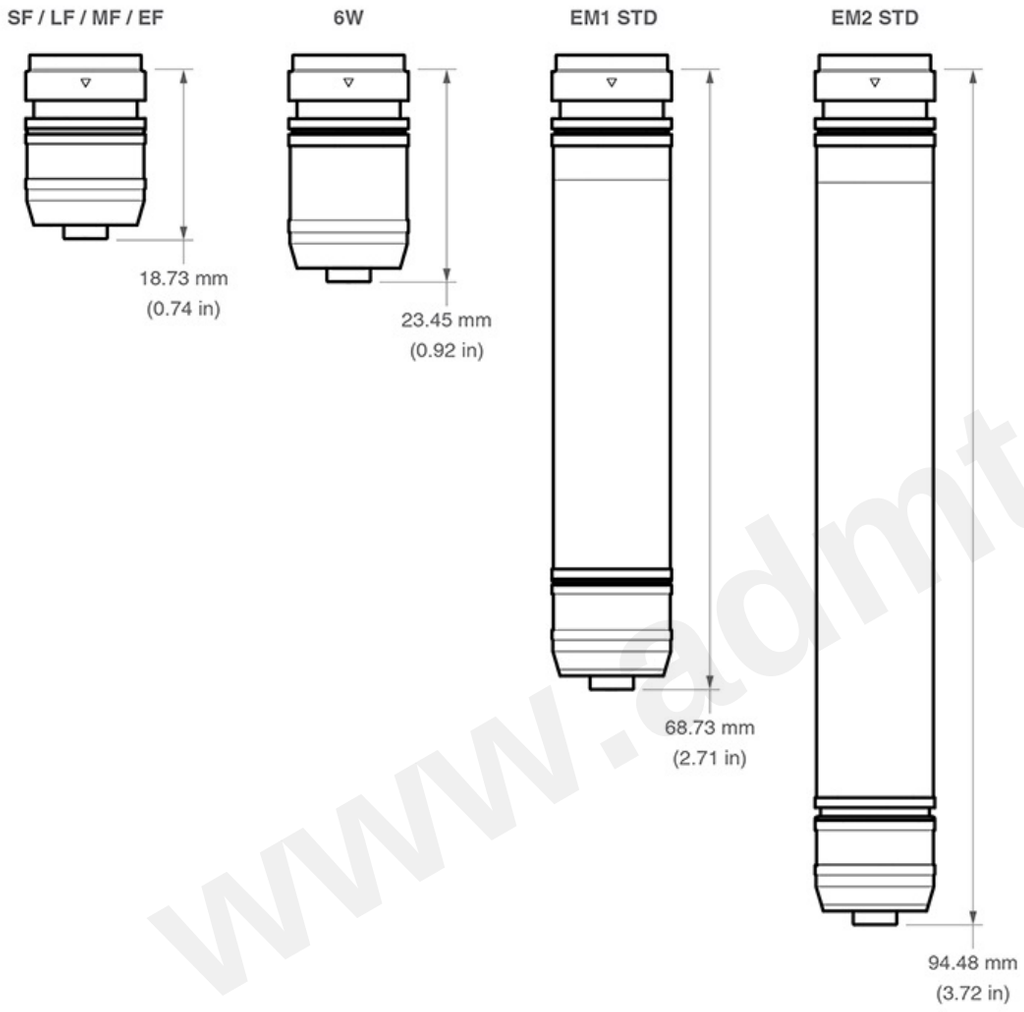

www.admt.kr

042-482-0621 / master@admt.kr

문의 사항은 www.admt.kr 로 연락 부탁 드리겠습니다.

TP20 probe modules

Each probe module, which houses the kinematic switching touch sensor mechanism, carries the stylus assembly and provides overtravel in the X, Y and +Z axes (–Z is offered when using the TP20 6-way probe module). Incorporating an M2 stylus mounting, each probe module is compatible with Renishaw's comprehensive range of M2 styli.

Designed to minimise the possibility of probe module misalignment generating a probe 'seated' signal, the probe module is held in position by a magnetically retained, highly repeatable kinematic coupling.

Electrical contact pins conduct the probe sense voltage through the coupling.

Trigger force options

The standard force probe module is suitable for most applications (when used with the recommended stylus range), but sometimes the effects of stylus length and mass, combined with machine acceleration and vibration, can cause the probe to false trigger (these are referred to as 'spurious triggers').

To allow the TP20 to be used on co-ordinate measuring machines where acceleration forces or vibration would otherwise result in spurious triggers, a choice of higher force probe modules is available. A low force probe module is also available for measurement of delicate materials. Refer to the applications guide later in this document for information on how to select the correct probe module for your application.

The type of probe modules supplied with your probe will be clearly marked on each probe module's front ring. The probe modules also carry a colour-coded front cap as follows:

- Low force (LF) probe module (green cap)
- Standard force (SF) probe module (black cap)
- Medium force (MF) probe module (grey cap)
- Extended force (EF) probe module (brown cap)
- 6-way (6W) probe module (blue cap)
- Extension module 1 standard force (EM1 STD) (black cap)
- Extension module 2 standard force (EM2 STD) (black cap)

www.admt.kr

042-482-0621 / master@admt.kr

문의 사항은 www.admt.kr 로 연락 부탁 드리겠습니다.

TP20 probe kits

The following TP20 probe kits are available from your supplier:

Inhibit probe body	Non-inhibit probe body	LF probe module	MF probe module	SF probe module	EF probe module
A-1371-0290	A-1371-0640			2	
A-1371-0291	A-1371-0641		1	1	
A-1371-0292	A-1371-0642		1		1
A-1371-0293	A-1371-0643		2		
A-1371-0294	A-1371-0644		1		1
A-1371-0295	A-1371-0645				2
A-1371-0428	A-1371-0603	1		1	
A-1371-0429	A-1371-0604	1	1		
A-1371-0370	A-1371-0656			1	
A-1371-0371	A-1371-0657		1		
A-1371-0372	A-1371-0658				1
A-1371-0390	A-1371-0602	1			

All probe kits contain:

- Probe body - inhibit or non-inhibit as selected from the table
- Number and type of probe modules as given in the table
- TP20 system installation and user's guide (H-1000-5008)
- S1 'C' spanner
- S9 double-ended 'C' spanner
- S7 stylus tools (× 2)
- CK200 cleaning material
- Test certificates

The following TP20 probe module kits are available from your supplier:

TP20 probe module kit (probe module only)	Part number
Low force probe module	A-1371-0392
Standard force probe module	A-1371-0270
Medium force probe module	A-1371-0271
Extended force probe module	A-1371-0272
6-way probe module	A-1371-0419
EM1 STD probe module	A-1371-0430
EM2 STD probe module	A-1371-0431
EM1 STD and EM2 STD probe modules	A-1371-0432

042-482-0621 / master@admt.kr

문의 사항은 www.admt.kr 로 연락 부탁 드리겠습니다.

MCR20 probe module changing rack kit

The MCR20 probe module changing rack kit is available in leg mounted or rail mounted versions. The kits comprise of the following primary components:

MCR20 leg mounted kit

- 1 × Renishaw MCR20 probe module changing rack
- 1 × Renishaw SCR200 mounting kit
- 1 × location piece
- 1 × Renishaw PS2R stylus
- 2 × Renishaw TP20 probe modules (probe module combination supplied will depend on part number of kit)

MCR20-R rail mounted kit

- 1 × Renishaw MCR20-R probe module changing rack
- 1 × XCR to MRS adaptor kit
- 1 × Renishaw PS2R stylus

The MCR20, can be easily mounted onto a CMM using the Renishaw SCR200 mounting kit and location piece, and the MCR20-R can be easily mounted to an MRS or MRS2 rail using the XCR to MRS adaptor kit. These racks are designed to securely hold stored probe modules for automatic changing, and to protect these stored probe modules from airborne contaminants that may be present within the working environment. Only seven datum points are needed to set the MCR20 rack alignment and probe module changing co-ordinates.

When using the rack, the inhibit version of the TP20 probe must be used. By generating a magnetic field about the front of each docking port lid, the MCR20 effectively 'closes' the probe's inhibit switch during a probe module changing cycle. Rack function is completely passive and no electrical input is required.

During automatic changing of probe modules, limited crash protection is provided by hinged overtravel mechanisms incorporated within both the base and the docking port assembly of the leg mounted MCR20. Provided any collision occurs in the direction of overtravel, the hinged overtravel mechanisms can be manually reset and it should not normally be necessary to re-datum the rack.

www.admt.kr

042-482-0621 / master@admt.kr

문의 사항은 www.admt.kr 로 연락 부탁 드리겠습니다.

Leg mounted MCR20 probe module changing rack kits are available with the following combinations of probe modules and may be ordered from your supplier:

MCR20 kit part number	LF probe module	SF probe module	MF probe module	EF probe module
A-1371-0261		2		
A-1371-0262		1	1	
A-1371-0263		1		1
A-1371-0264			2	
A-1371-0265			1	1
A-1371-0266				2
A-1371-0267	1	1		
A-1371-0268	1		1	
A-1371-1100	2			

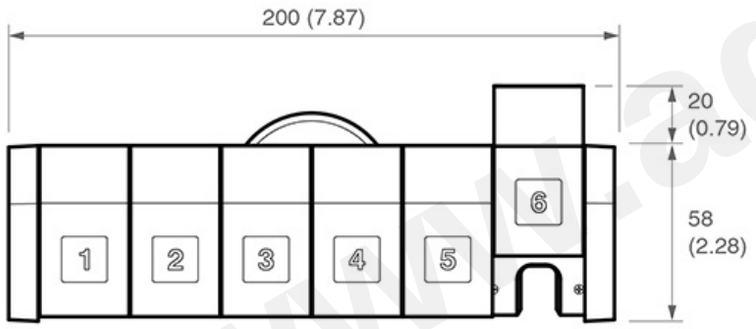

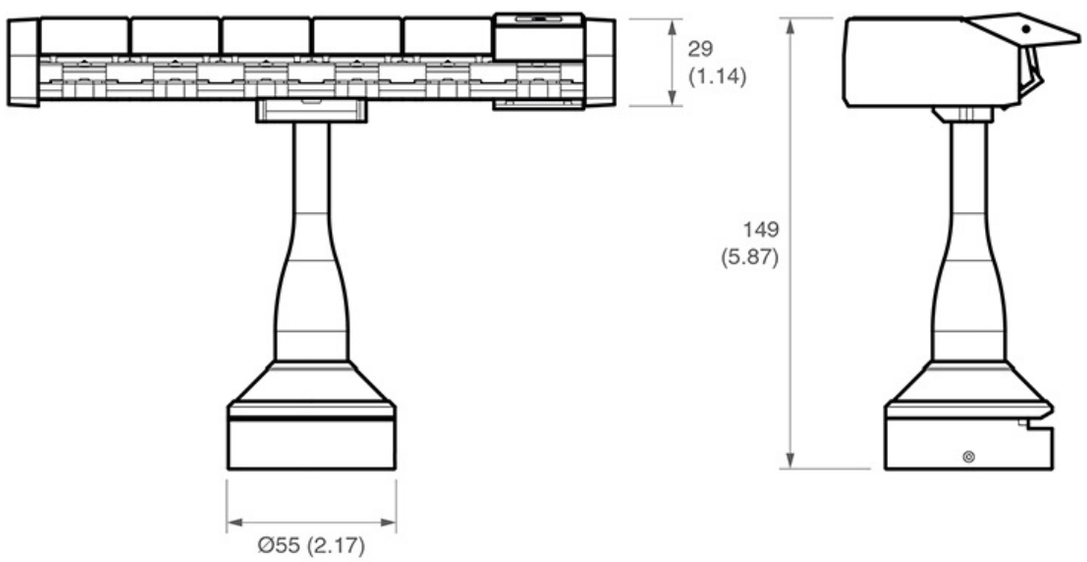

042-482-0621 / master@admt.kr

문의 사항은 www.admt.kr 로 연락 부탁 드리겠습니다.

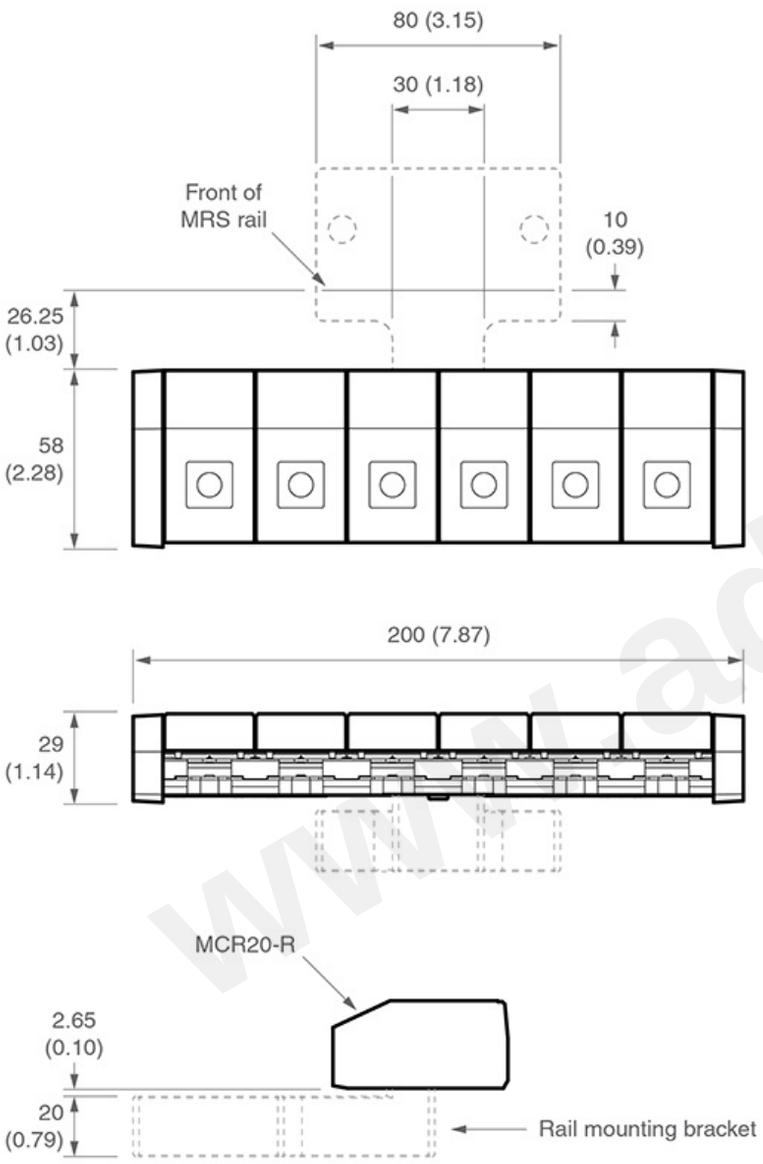

NOTE: Dimensions in mm (in).

042-482-0621 / master@admt.kr

문의 사항은 www.admt.kr 로 연락 부탁 드리겠습니다.

TCR20 module change rack for PH20

TCR20 is a compact probe module rack for use with PH20 that provides the capability for quick and repeatable tool changing and tip correction. It is available in TCR20 leg mounted or TCR20-R rail mounted versions.

Based on the industry standard range of MCR20 rack systems, TCR20 securely stores modules for rapid automatic changing, protecting mating surfaces from any airborne contaminants within the working envelope of the machine.

TCR20 carries the full range of TP20 modules which are compatible with the PH20 system and can accommodate up to six module / stylus combinations.

TCR20 features an integrated tip datum artefact in the centre of the rack assembly, minimising the cycle time of the tip correct procedure.

Tip correction is key when the highest level of accuracy is required. It compensates for any residual variations following a tool change, maintaining a market leading level of accuracy from PH20.

The TCR20 module change rack kit is not supplied with any TP20 probe modules. It can be ordered from your supplier under the following part number:

Part number	Description
A-1371-1001	TCR20 rack kit
A-1371-0882	TCR20-R MRS kit

www.admt.kr

042-482-0621 / master@admt.kr

문의 사항은 www.admt.kr 로 연락 부탁 드리겠습니다.

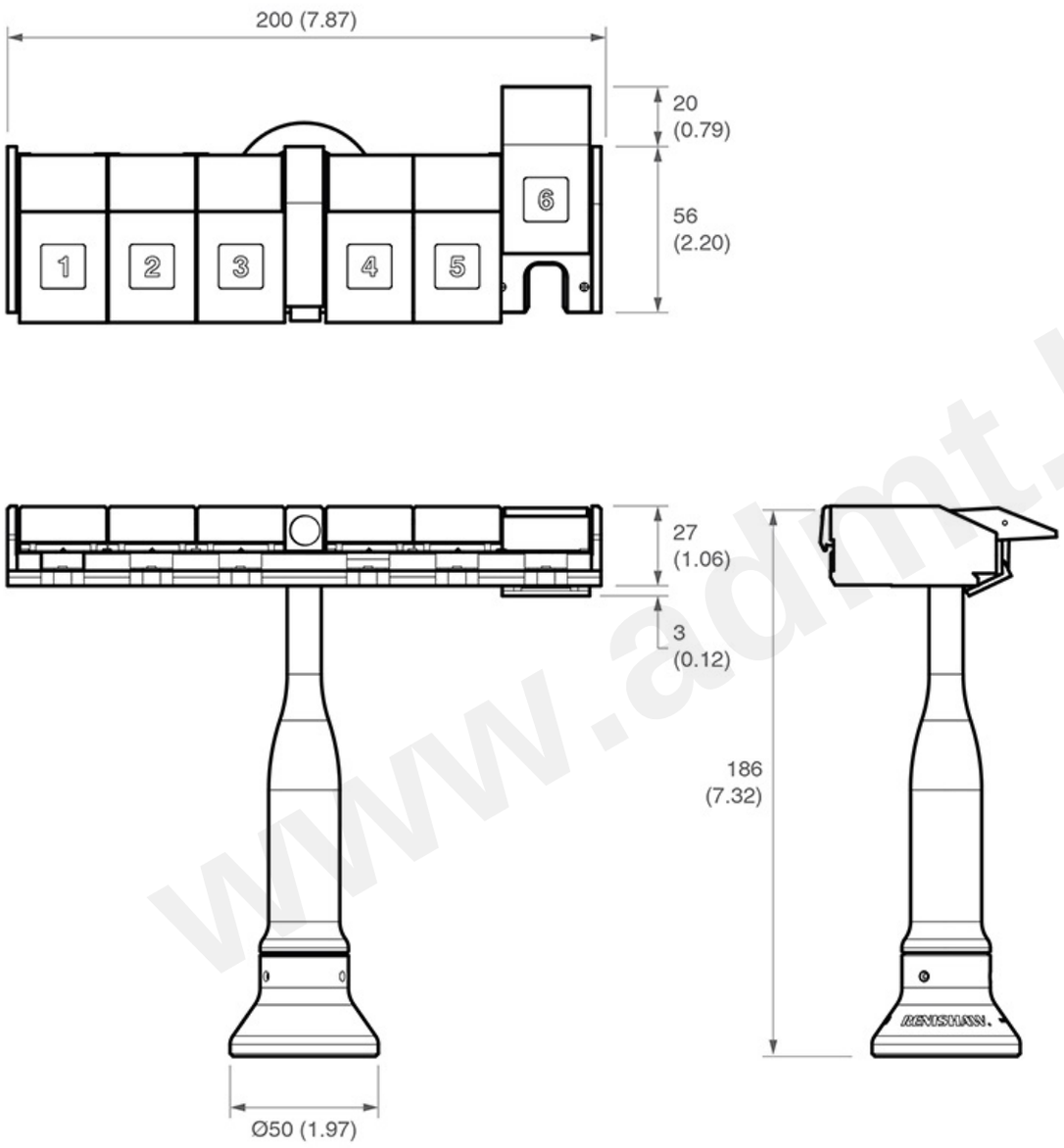

www.admt.kr

042-482-0621 / master@admt.kr

문의 사항은 www.admt.kr 로 연락 부탁 드리겠습니다.

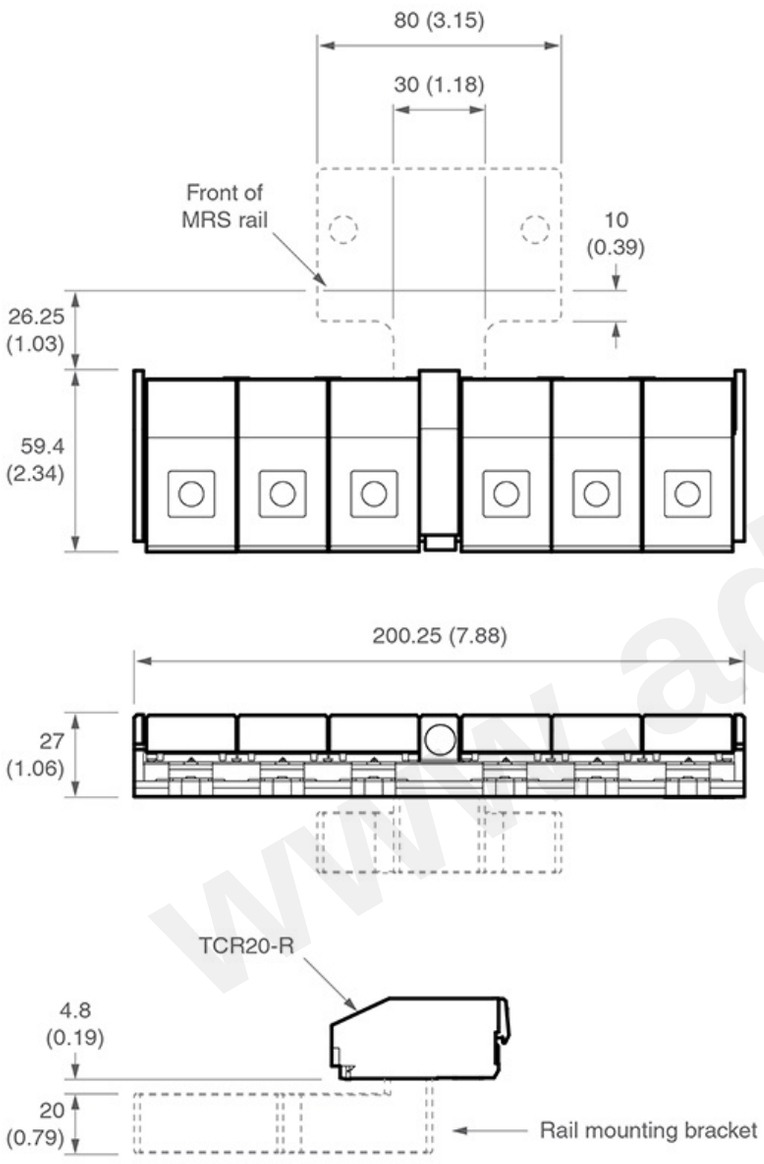

NOTE: Dimensions in mm (in).

042-482-0621 / master@admt.kr

문의 사항은 www.admt.kr 로 연락 부탁 드리겠습니다.

Component connection

Fitting a TP20 probe onto a probe head

1. By hand, screw the threaded end of the probe body into the M8 bush of the probe head and hand-tighten to secure.
2. Fit the S1 ‘C' spanner (supplied) onto the probe body as shown below.
3. Using the S1 ‘C' spanner, fully hand-tighten the probe body into the M8 bush (0.3 Nm - 0.5 Nm).

Fitting a stylus onto a probe module

NOTE: For advice on both stylus and probe module selection, refer to the applications guide.

1. Ensuring that you have selected the correct probe module for your given application (see probe module selection), screw the threaded end of your chosen stylus into the M2 stylus mount of the probe module and hand-tighten to secure.
2. Using the type S7 stylus tools provided, or type S20 spanner if fitting a stylus from the Renishaw GF range, fully hand-tighten the stylus into the stylus mount to achieve the recommended tightening torque of between 0.05 Nm and 0.15 Nm (maximum permissible torque is 0.3 Nm).

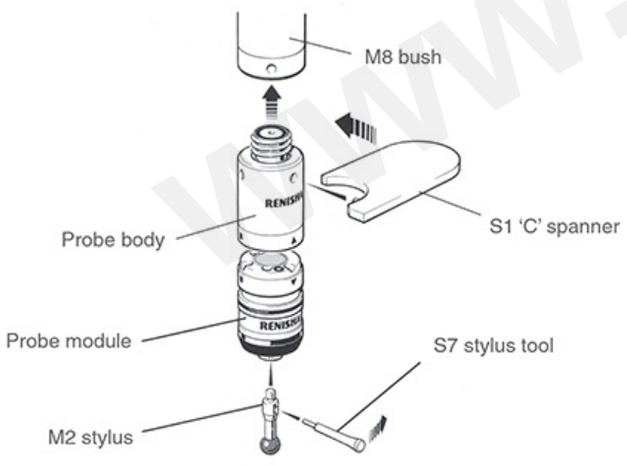

042-482-0621 / master@admt.kr

문의 사항은 www.admt.kr 로 연락 부탁 드리겠습니다.

Fitting a probe module and stylus onto a probe body

1. Visually examine the mating faces of both the probe module and the probe head for cleanliness. Where necessary, clean the mating surfaces using the CK200 cleaning kit (supplied).
2. Offer up the probe module to the probe body and, ensuring the three alignment marks on both the probe module and probe body are correctly aligned, allow the probe module to engage the probe body under magnetic force.

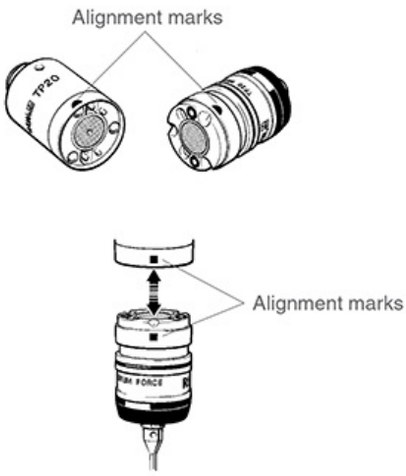

www.admt.kr

042-482-0621 / master@admt.kr

문의 사항은 www.admt.kr 로 연락 부탁 드리겠습니다.

Mounting MCR20 onto the CMM

To mount the MCR20 probe module change rack onto your CMM, carry out the following procedure:

CAUTION: For optimum crash protection, it is recommended that the MCR20 is mounted as close as possible to the extreme edge of the CMM's operating envelope.

- Place the location piece in the desired position on the CMM table and secure in place using the M8 / M10 bolt and washer supplied. Using the appropriate Allen key (supplied), fully hand-tighten the M8 / M10 bolt into the threaded insert within the CMM table.
- A special location piece with integral bolt is available for M12 inserts (Renishaw part number M-1371-0298). If using this tighten using an S1 'C' spanner (supplied with the probe kit).
- Mount the lower base of the MCR20 over the location piece and rotate the X-axis of the rack until the required alignment is obtained.
- Using the 1.5 mm hexagonal key supplied, fully hand-tighten the M3 cone point grubscrew (0.5 Nm - 1 Nm) to lock the MCR20 in position.

NOTES: Whilst the TP20 system does not require that the MCR20 is aligned with the CMM axes, ease of programming or software constraints may make alignment with the CMM axes desirable.
The MCR20 is not designed for horizontal operation with the ports in a vertical orientation.

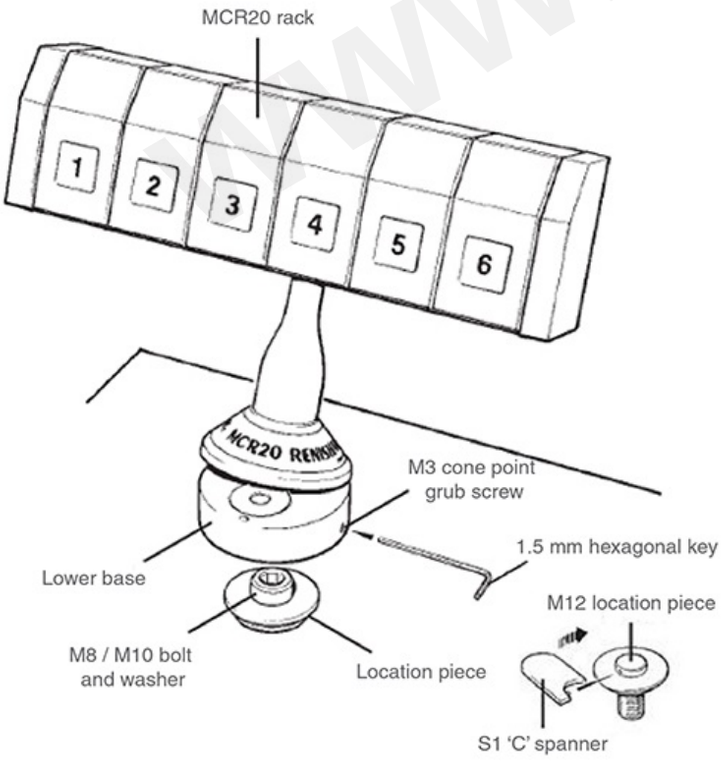

042-482-0621 / master@admt.kr

문의 사항은 www.admt.kr 로 연락 부탁 드리겠습니다.

Datuming MCR20

NOTES: Renishaw recommends that datuming of the MCR20 is performed using the Renishaw PS2R stylus supplied. If a different stylus is to be used, the length (L) must be either 20 mm or 30 mm and the appropriate ball radius (R) must be used to calculate offsets.
It is strongly recommended that the EM1 STD and EM2 STD probe extension modules are not used for datuming of the MCR20, as the extended probe length may lead to increased concentricity errors within the probe system.
The following instructions assume that uncompensated probing points are taken, and therefore that the target positions for port docking are absolute machine co-ordinates.

Aligning MCR20 to the CMM axes

To align the MCR20 probe module changing rack to the axes of your CMM, carry out the following procedures:

1. Latch all port lids in their open position by pushing each lid fully open and engaging the locking pegs into the slots in the docking plate.
2. Take points P1 and P2.
3. Using the 1.5 mm hexagonal key supplied, fully release the M3 cone point grubscrew within the base of the MCR20.
4. Adjust the orientation of the MCR20 until the runout between points P1 and P2 is less than 0.25 mm. Retaining the MCR20 in this position, re-tighten the M3 cone point grubscrew (0.5 Nm - 1 Nm) using the 1.5 mm hexagonal key supplied.

Establishing the docking depth (Y)

To establish the docking depth (Y) of the MCR20 ports, carry out the following procedure:

1. Take points P1 and P2.
2. Establish the docking depth for all ports using the following formula:

{Y value of line P1/P2 + R (1 mm) + 8.75 mm}

where R = stylus ball radius

Establishing the docking height (Z)

To establish the docking height (Z) of the MCR20 ports, carry out the following procedure:

1. Take points P3, P4 and P5. From the three points taken, construct a Z axis plane for the rack.
2. Establish the docking height for all ports using the following formula:

{Z value of plane P3/P4/P5 – L (20 mm) – R (1 mm) – 21.25 mm}

where L = stylus length

042-482-0621 / master@admt.kr

문의 사항은 www.admt.kr 로 연락 부탁 드리겠습니다.

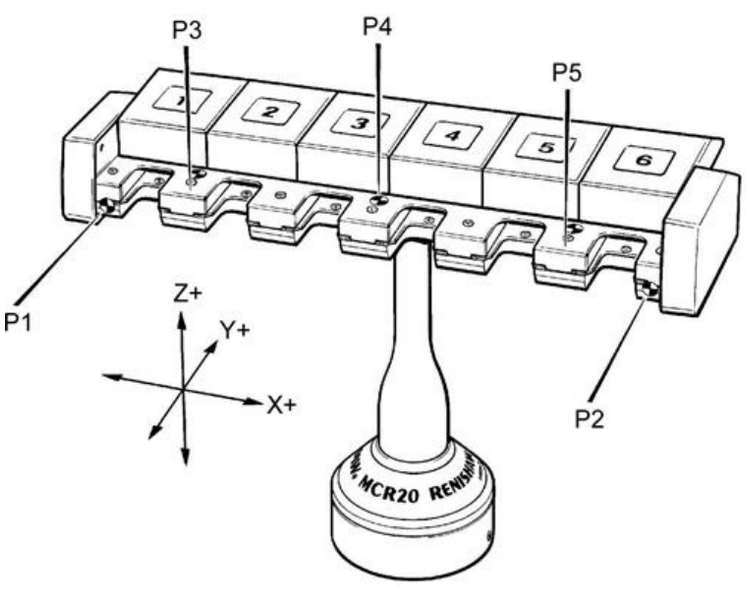

Establishing the docking centre for port 1

To establish the docking centre for port 1 (X1), carry out the following procedure:

NOTE: The stylus shank may be used to take points P6 and P7.

1. Take points P6 and P7.
2. Establish the docking centre for port 1 (X1) using the following formula:

{centre point of P6/P7 = X1}

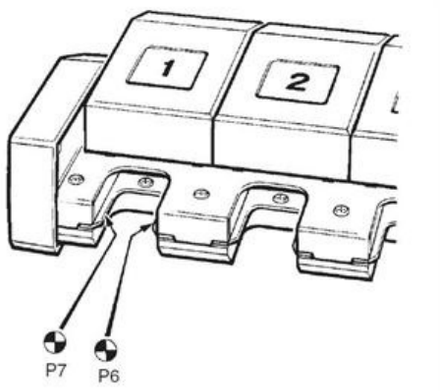

042-482-0621 / master@admt.kr

문의 사항은 www.admt.kr 로 연락 부탁 드리겠습니다.

Establishing the docking centre for ports 2 to 6

To establish the docking centre for ports 2 (X2) to 6 (X6), perform the following calculations:

Docking centre port 2 (X2) = X1 + 30 mm

Docking centre port 3 (X3) = X2 + 30 mm

Docking centre port 4 (X4) = X3 + 30 mm

Docking centre port 5 (X5) = X4 + 30 mm

Docking centre port 6 (X6) = X5 + 30 mm

Establishing the docking target co-ordinates

CAUTION: The Y values may be different for each port if the MCR20 is not aligned with the CMM axes.

To establish the docking centre co-ordinates of ports 1 (X1) to 6 (X6), perform the following calculations:

Port 1 = X1, Y, Z

Port 2 = X2, Y, Z

Port 3 = X3, Y, Z

Port 4 = X4, Y, Z

Port 5 = X5, Y, Z

Port 6 = X6, Y, Z

www.admt.kr

042-482-0621 / master@admt.kr

문의 사항은 www.admt.kr 로 연락 부탁 드리겠습니다.

Mounting TCR20 onto the CMM

NOTE: To minimise the machine volume lost it is recommended that the TCR20 is mounted as close as possible to the extreme edge of the CMM's operating envelope.

1. Fix the rack base to the CMM bed using the appropriate fixing screw. Depending upon the size of screw required it may be necessary to also use a washer.



2. Fit the TCR20 leg into the base and orientate the rack. Secure the rack in the correct orientation by tightening the three grubscrews that are located in the rack base.



TCR20 alignment and change routine

The following routines are handled through UCCserver for TCR20:

- Alignment routine
- Put down and pick up routine
- Safe position

042-482-0621 / master@admt.kr

문의 사항은 www.admt.kr 로 연락 부탁 드리겠습니다.

Product operation

Storing and changing probe modules

NOTES: The inhibit switch in the inhibit version of the TP20 body will be automatically actuated by the magnetic field when it approaches the front of the MCR20 probe module changing rack. The minimum distance from the MCR20 probe module changing rack at which the TP20 is armed will vary with height.
When using long styli fitted to the EM1 STD or EM2 STD probe modules, do not store them in ports three or four of the MCR20 rack.

Calculating the safe clearance position

The recommended safe clearance position is located at the minimum distance from the port centre (at docking height Z) where the probe will be armed, if the probe module is attached.

The safe clearance position for any port (n) can be calculated from:

{Xn, Ys, Z} where Ys = Y – 100 mm

www.admt.kr

042-482-0621 / master@admt.kr

문의 사항은 www.admt.kr 로 연락 부탁 드리겠습니다.

Storing a probe module

To store a probe module, carry out the following procedure:

Step 1 - Move to the safe clearance position Xn, Ys, Z for the vacant port (n).

Step 2 - Move to the docking target co-ordinate for port (n) along the Y-axis at the docking height (Z).

Step 3 - Move up to the release height Zr, where: {Zr = Z + 3 mm}

Step 4 - Withdraw from the release co-ordinate, maintaining the release height, along the Y-axis to a point clear of the port lids where the probe remains inhibited. This point is known as the 'retract point' (RP) and has the co-ordinates: {RP = Xn, Yr, Zr} where Yr = Y – 17.2 mm

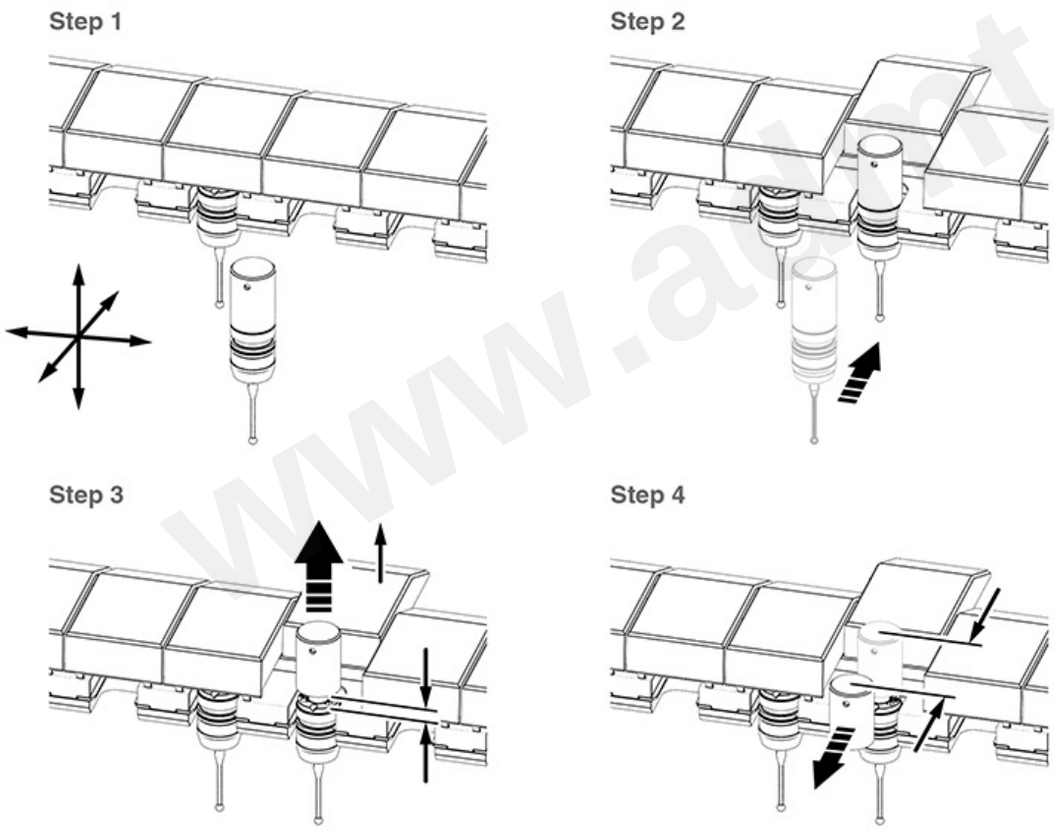

042-482-0621 / master@admt.kr

문의 사항은 www.admt.kr 로 연락 부탁 드리겠습니다.

Picking up a stored probe module

To pick up a stored probe module, carry out the following procedure:

Step 1.- Move along the X-axis in the direction necessary to arrive at the RP co-ordinates for the next port required.

Step 2.- Move along the Y-axis to the release co-ordinates above the centre of port Xn, Y, Zr.

Step 3.- Move down to the docking co-ordinates Xn, Y, Z to attach the probe module.

Step 4.- Withdraw along the Y-axis to the clearance position at co-ordinates Xn, Ys, Z.

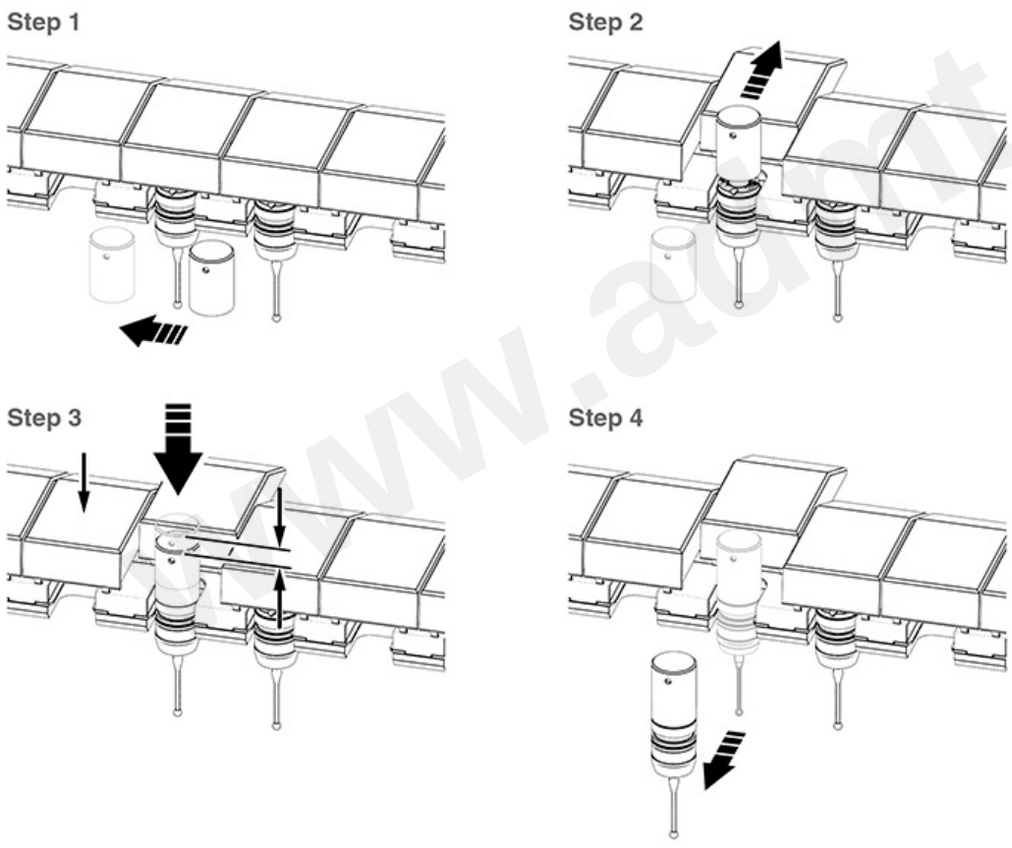

www.admt.kr

042-482-0621 / master@admt.kr

문의 사항은 www.admt.kr 로 연락 부탁 드리겠습니다.

Summary of probe module changing procedure

Operation	X-axis	Y-axis	Z-axis
Safe clearance position for port (n)	Xn	Ys	Z
Move to docking position	*	Y	*
Release probe module	*	*	Zr
Move to retract point (RP)	*	Yr	*
Select next port (n)	Xn	*	*
Enter port	*	Y	*
Move to docking position	*	*	Z
Move to safe clearance position	*	Ys	*

Xn = X1 to X6 as selected by the user

Ys = Y – 100 mm

Zr = Z + 3 mm

Yr = Y – 17.2 mm

* = No change to the previous setting of the axis register

www.admt.kr

042-482-0621 / master@admt.kr

문의 사항은 www.admt.kr 로 연락 부탁 드리겠습니다.

Technical data

Measuring performance

NOTE: The following data is derived from high accuracy test rig measurements and may not represent the performance achievable on a CMM. Please consult your CMM supplier for overall system accuracy information.

Performance at 10 mm stylus length

Probe module type	Unidirectional repeatability* (2σ)	2D (XY) form measurement deviation*
LF	0.35 µm	± 0.6 µm
SF	0.35 µm	± 0.8 µm
MF	0.5 µm	± 1 µm
EF	0.65 µm	± 2 µm
6-way	0.8 µm	± 1.5 µm
EM1 STD	0.35 µm	± 0.8 µm
EM2 STD	0.35 µm	± 0.8 µm

* Measured at a trigger speed of 8 mm/s

Test stylus ball diameter 4 mm

www.admt.kr

042-482-0621 / master@admt.kr

문의 사항은 www.admt.kr 로 연락 부탁 드리겠습니다.

Probing forces and overtravel limits

Probe module type and stylus length	XY (trigger force (nominal at stylus tip))	Z (trigger force (nominal at stylus tip))	XY (overtravel force (max. at stylus tip))	+Z (overtravel force (max. at stylus tip))	XY** (overtravel displacement)	+Z (overtravel displacement)
LF 10 mm	0.055 N (5.5 gf)	0.65 N (65 gf)	0.09 N (9 gf)	1.15 N (115 gf)	±14°	3.1 mm
SF 10 mm	0.08 N (8 gf)	0.75 N (75 gf)	0.2 N - 0.3 N (20 gf - 30 gf)	3.5 N (350 gf)	±14°	4 mm
MF 25 mm	0.1 N (10 gf)	1.9 N (190 gf)	0.2 N - 0.4 N 20 gf - 40 gf)	7 N (700 gf)	±14°	3.7 mm
EF 50 mm	0.1 N (10 gf)	3.2 N (320 gf)	0.2 N - 0.5 N (20 gf - 50 gf)	10 N (1kgf)	±14°	2.4 mm
6-way* 10 mm	0.14 N (14 gf)	1.6 N (160 gf)	0.25 N (25 gf)	2.5 N (250 gf)	±14°	3.6 mm
EM1 STD 10 mm	0.08 N (8 gf)	0.75 N (75 gf)	0.2 N - 0.3 N (20 gf - 30 gf)	3.5 N (350 gf)	±14°	4 mm
EM2 STD 10 mm	0.08 N (8 gf)	0.75 N (75 gf)	0.2 N - 0.3 N (20 gf - 30 gf)	3.5 N (350 gf)	±14°	4 mm

* 6-way:

-Z (overtravel force (max. at stylus tip))	-Z** (overtravel displacement)
1.6 N (160 gf)	1.5 mm

**** NOTE:** The probe module may detach if this value is exceeded.

Probe module changing repeatability

Probe module changing method	Repeatability
Automatic changing	±0.5 µm
Manual changing	±1 µm

042-482-0621 / master@admt.kr

문의 사항은 www.admt.kr 로 연락 부탁 드리겠습니다.

Technical specifications

TP20

Product compatibility	The TP20 is suitable for use with all Renishaw probe interfaces and probe heads which service the TP1, TP2 and TP6 touch-trigger probes. The TP20 is compatible with the PEL, PK, PAA and PEM series of probe extensions / adaptors.
Diameter	13.2 mm
Length - LF / SF / MF / EF	38 mm
Length - EM1 STD	88 mm
Length - EM2 STD	113 mm
Length - 6-way	42 mm
Probe mount	Thread M8 x 1.25 x 5 mm
Stylus mount	Thread M2 x 0.4
Sense directions - LF / SF / MF / EF / EM1 STD / EM2 STD	5-way (± X, ± Y, + Z)
Sense directions - 6-way	6-way (± X, ± Y, ± Z)
Probe module pull-off force	10 N (1 kgf) maximum
Sealing	IP30
Cable length	50 m with (24 awg) conductors
Probe modules life	25,000 changes

MCR20

Length	200 mm
Width	60 mm
Height	145 mm
Port entry velocity	Maximum 800 mm/s
Mounting orientation	Not designed for horizontal operation with the ports in a vertical orientation
Y axis overtravel	Hinged breakout from base 55 mm travel at port height
Z axis overtravel	Hinged docking port assembly 90° travel in –Z axis
Inhibit range	100 mm from port centre

www.admt.kr

042-482-0621 / master@admt.kr

문의 사항은 www.admt.kr 로 연락 부탁 드리겠습니다.

TCR20

Width	200 mm (7.87 in)
Depth	57 mm (2.24 in)
Base diameter	50 mm (1.97 in)
Height to top of rack	186 mm (7.32 in)
Height to bottom of ports	159 mm (6.26 in)
Port entry velocity	Maximum 800 mm/s (31.5 in/sec)
Mounting orientation	Ports in a horizontal position only
Tip correct artefact	Centre of rack assembly
Overtravel	Not required - protection provided by PH20 head
Inhibit range	Not required - provided by UCC controller

www.admt.kr

042-482-0621 / master@admt.kr

문의 사항은 www.admt.kr 로 연락 부탁 드리겠습니다.

Applications guide

Probe module selection

To obtain the best possible performance from your TP20 probe, it is important to select the correct probe module for your specific application. When choosing the probe module to be used, the following considerations should be addressed:

- The mass of the stylus assembly and its centre of gravity - it is always best to use the shortest stylus possible
- The orientation of the probe body
- The levels of acceleration and vibration to which the TP20 probe will be subjected - these will vary with each type of CMM and movement velocity

The following probe modules are available for use with the TP20 probe. Each probe module is clearly marked on its front ring and also carries a colour-coded front cap as follows:

- Low force probe module (green cap)
- Standard force probe module (black cap)
- Medium force probe module (grey cap)
- Extended force probe module (brown cap)
- 6-way probe module (blue cap)
- EM1 STD probe module (black cap)
- EM2 STD probe module (black cap)

NOTE: It is recommended that a standard force probe module is always used, except where the application or machine acceleration or vibration would cause the TP20 to false trigger.

Low force probe module

The low force probe module, identified by a green cap, is suited to applications that require a low trigger force, for example rubber seals.

Standard force probe module

The standard force probe modules (SF, EM1 STD and EM2 STD) are identified by black caps and are suited to the majority of applications.

Medium force probe module

The medium force probe module, identified by a grey cap, is provided for use where a higher trigger force than standard is required.

Extended force probe module

The extended force probe module is identified by a brown cap. Typically, this probe module will only be required with large stylus assemblies, and where spurious triggers caused by machine vibration and acceleration preclude the use of either the standard or medium force probe modules.

6-way probe module

The 6-way probe module is identified by a blue cap. This probe module is designed for 6-way operation where there is a requirement to measure in the –Z direction, for example when measuring undercuts.

042-482-0621 / master@admt.kr

문의 사항은 www.admt.kr 로 연락 부탁 드리겠습니다.

Stylus selection

NOTE: Choosing the best stylus for a given application is an important factor in achieving optimum probe performance. For further information on the full range of Renishaw styli, please refer to Renishaw's styli and accessories brochure (H 1000-3200) which can be ordered from your supplier or downloaded from Renishaw's web site, www.renishaw.com.

When selecting a stylus, it is important that the stylus length is kept to the minimum required to access all features to be measured, and that the stylus type offers the maximum possible stiffness. Factors that affect stiffness are:

- Joints in the styli that tend to reduce rigidity and should therefore be kept to the absolute minimum
- Stem diameters that are governed by the ball tip diameter of the stylus
- Stem material that can be stainless steel, ceramic or graphite fibre (GF)

It is also important to ensure that the stylus ball diameter chosen is as large as is practical. This not only ensures that the stylus will be as stiff as possible, but also reduces the stylus's susceptibility to surface form and surface finish.

Owing to the modular construction of the TP20, when selecting and using styli the following criteria should be applied:

- Work only within the recommended stylus limits for each probe module (refer to Recommended stylus limits)
- Always use the shortest possible stylus
- If using larger styli than those recommended for use with each probe module, always conduct trials to establish the effect on measuring performance
- Minimise the mass of styli by using either ceramic or graphite fibre (GF) stems

Recommended stylus limits

Owing to the modular construction of the TP20 probe, it is recommended that the limits shown in the figures below are applied when selecting styli to be used.

Low force probe module

The low force probe module has the following recommended stylus limits:

- Steel and carbide styli up to 30 mm long
- No star or cranked styli

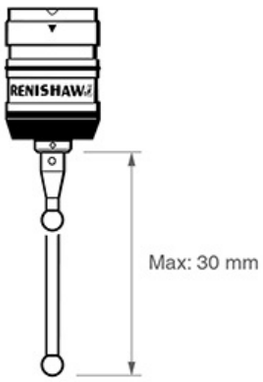

042-482-0621 / master@admt.kr

문의 사항은 www.admt.kr 로 연락 부탁 드리겠습니다.

Standard force probe module

The standard force probe modules (SF, EM1 STD and EM2 STD) can be used with the following range of styli:

- Steel and carbide styli up to 40 mm long
- Renishaw graphite fibre (GF) type styli up to 50 mm long
- Star and cranked styli up to 20 mm offset

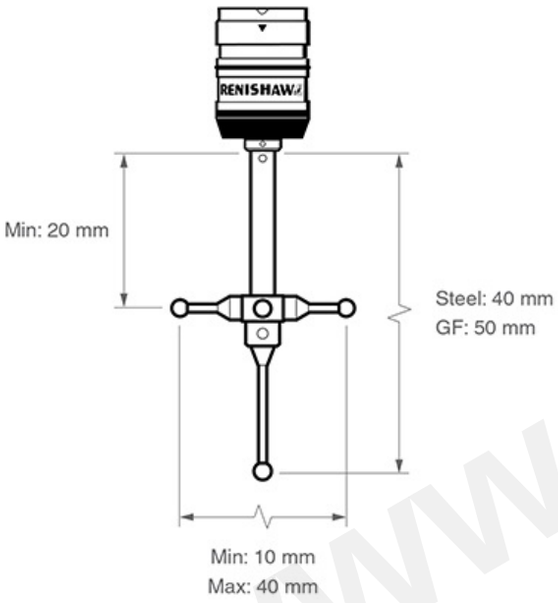

www.admt.kr

042-482-0621 / master@admt.kr

문의 사항은 www.admt.kr 로 연락 부탁 드리겠습니다.

Medium force and extended force probe modules

The medium force and extended force probe modules have the following recommended stylus limits:

- Any stylus type up to 60 mm long
- Star and cranked styli up to 20 mm offset



www.admt.kr

042-482-0621 / master@admt.kr

문의 사항은 www.admt.kr 로 연락 부탁 드리겠습니다.

6-way probe module

The recommended stylus limits for the 6-way probe module are:

- Any stylus type up to 30 mm long
- Star and cranked styli up to 10 mm offset

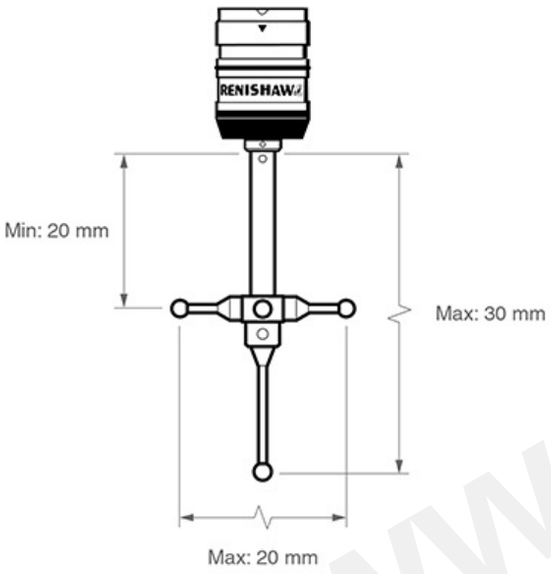

www.admt.kr

042-482-0621 / master@admt.kr

문의 사항은 www.admt.kr 로 연락 부탁 드리겠습니다.

Comparative stylus lengths

A comparison of the minimum and maximum stylus lengths for use with each probe module is shown in the following figure:

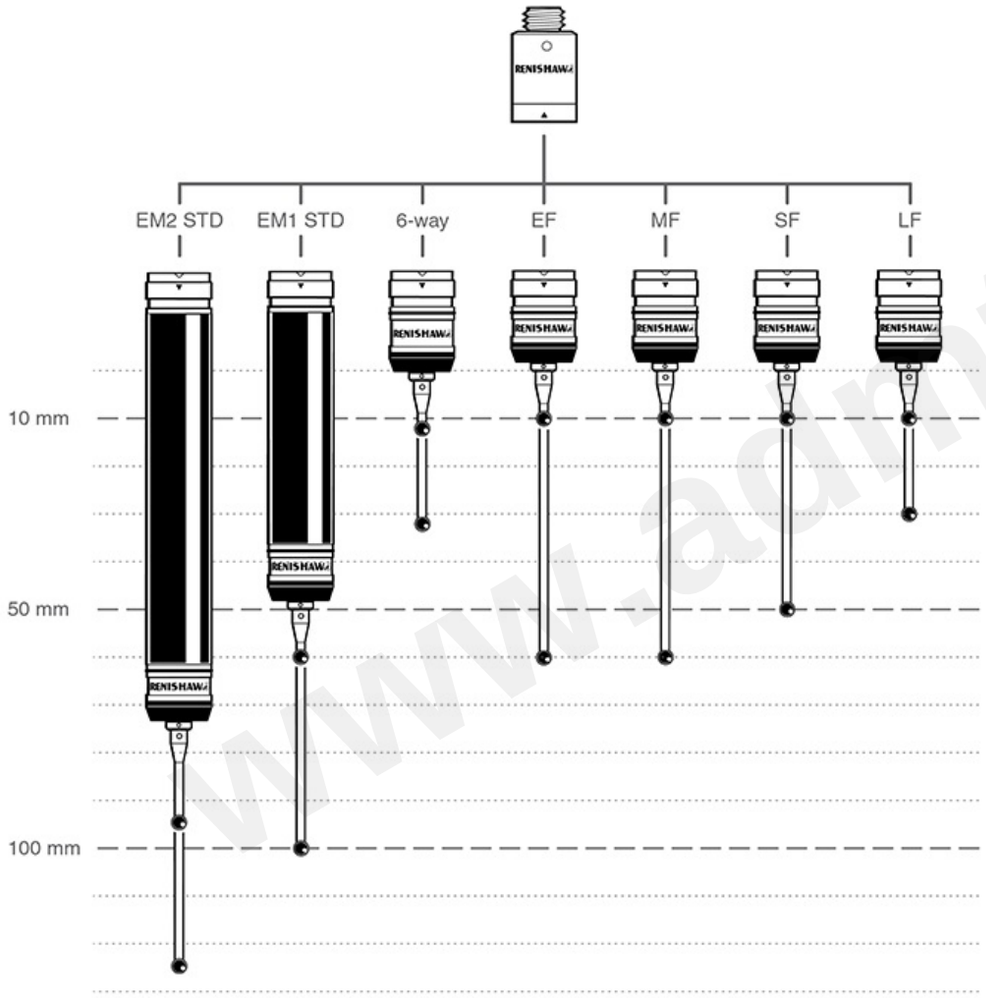

www.admt.kr

042-482-0621 / master@admt.kr

문의 사항은 www.admt.kr 로 연락 부탁 드리겠습니다.

Product maintenance

NOTE: Maintenance of the TP20 probe is restricted to the periodic cleaning of the kinematic couplings of both the probe body and the probe module(s). To aid cleaning of these couplings, each TP20 probe is supplied with a Renishaw CK200 cleaning kit.

Each Renishaw CK200 cleaning kit contains a specialised material to effectively remove contamination from the precision ball / V groove seatings, electrical contacts and permanent magnets of the kinematic couplings.

NOTE: When operating the TP20 probe in environments subjected to airborne contamination, the user should determine the frequency of cleaning required to ensure the kinematic couplings remains uncontaminated.

Whilst the kinematic coupling mechanism is highly tolerant of nonmetallic dust, regular inspection and cleaning with the material provided is recommended to ensure continued high performance. Instructions for use are included with the cleaning kit. If required, replacement kits can be ordered from your supplier (Renishaw part number A-1085-0016).

Probe modules that are not attached to the probe body should be stored in the MCR20, TCR20 or MSR1 rack, or in their transport boxes, to prevent contamination.

www.admt.kr

042-482-0621 / master@admt.kr

문의 사항은 www.admt.kr 로 연락 부탁 드리겠습니다.

Renishaw plc
New Mills, Wotton-under-Edge
Gloucestershire, GL12 8JR
United Kingdom

T +44 (0)1453 524524
F +44 (0)1453 524901

www.renishaw.com/cmmsupport

RENISHAW
apply innovation™

www.admt.kr

For worldwide contact details, please visit our main website at www.renishaw.com/contact

Issued 09 2024

042-482-0621 / master@admt.kr