문의 사항은 www.admt.kr 로 연락 부탁 드리겠습니다.

TP200 user's guide

Documentation part number: H-1000-5014-07-C



www.admt.kr

042-482-0621 / master@admt.kr

문의 사항은 www.admt.kr 로 연락 부탁 드리겠습니다.

TP200 general information

© 1998 - 2026 Renishaw plc. All rights reserved.

ORIGINAL LANGUAGE VERSION

This document may not be copied or reproduced in whole or in part, or transferred to any other media or language by any means, without the prior written permission of Renishaw.

Disclaimer

WHILE CONSIDERABLE EFFORT WAS MADE TO VERIFY THE ACCURACY OF THIS DOCUMENT AT PUBLICATION, ALL WARRANTIES, CONDITIONS, REPRESENTATIONS AND LIABILITY, HOWSOEVER ARISING, ARE EXCLUDED TO THE EXTENT PERMITTED BY LAW.

RENISHAW RESERVES THE RIGHT TO MAKE CHANGES TO THIS DOCUMENT AND TO THE EQUIPMENT, AND/OR SOFTWARE AND THE SPECIFICATION DESCRIBED HEREIN WITHOUT OBLIGATION TO PROVIDE NOTICE OF SUCH CHANGES.

Trade marks

RENISHAW®, the probe symbol and REVO® are registered trade marks of Renishaw plc.

Renishaw product names, designations and the mark 'apply innovation' are trade marks of Renishaw plc or its subsidiaries.

Other brand, product or company names are trade marks of their respective owners.

WEEE



The use of this symbol on Renishaw products and / or accompanying documentation indicates that the product should not be mixed with general household waste upon disposal. It is the responsibility of the end user to dispose of this product at a designated collection point for waste electrical and electronic equipment (WEEE) to enable reuse or recycling. Correct disposal of this product will help to save valuable resources and prevent potential negative effects on the environment. For more information, please contact your local waste disposal service or Renishaw distributor.

Warranty

Unless you and Renishaw have agreed and signed a separate written agreement, the equipment and/or software are sold subject to the Renishaw Standard Terms and Conditions supplied with such equipment and/or software, or available on request from your local Renishaw office.

Renishaw warrants its equipment and software for a limited period (as set out in the Standard Terms and Conditions), provided that they are installed and used exactly as defined in associated Renishaw documentation. You should consult these Standard Terms and Conditions to find out the full details of your warranty.

Equipment and/or software purchased by you from a third-party supplier is subject to separate terms and conditions supplied with such equipment and/or software. You should contact your third-party supplier for details.

042-482-0621 / master@admt.kr

문의 사항은 www.admt.kr 로 연락 부탁 드리겠습니다.

Care of equipment

Renishaw probes and associated systems are precision tools used for obtaining precise measurements and must therefore be treated with care.

Changes to Renishaw products

Renishaw reserves the right to improve, change or modify its hardware or software without incurring any obligations to make changes to Renishaw equipment previously sold.

Company registration details

Renishaw plc. Registered in England and Wales. Company no: 1106260. Registered office: New Mills, Wotton-under-Edge, Gloucestershire, GL12 8JR, UK.

Packaging

To aid end user recycling and disposal the materials used in the different components of the packaging are stated here:

Packaging component	Material	94/62/EC code	94/62/EC number
Outer box	Non-corrugated fibreboard	PAP	21
Box	Polypropylene	PP	5
Packing foam	Low density polyethylene	LDPE	4
Insert	Polypropylene	PP	5
Bag	Low density polyethylene	LDPE	4

CAUTION: If it is necessary to return any part of the system please ensure it is packaged carefully. Failure to do so could result in transit damage for which the customer would be liable. Products supplied in plastic boxes must be returned in the original packaging.

042-482-0621 / master@admt.kr

문의 사항은 www.admt.kr 로 연락 부탁 드리겠습니다.

TP200 product compliance

EU declaration of conformity

Contact Renishaw plc or visit www.renishaw.com/EUCMM for the full EU declaration.

UK declaration of conformity

Contact Renishaw plc or visit www.renishaw.com/UKCMM for the full UK declaration.

AU declaration of conformity

Contact Renishaw plc or visit www.renishaw.com/AUCMM for the full AU declaration.



www.admt.kr

042-482-0621 / master@admt.kr

문의 사항은 www.admt.kr 로 연락 부탁 드리겠습니다.

EMC conformity

This equipment must be installed and used in accordance with this installation guide. This product is intended for industrial use only and should not be used in a residential area or connected to a low voltage power supply network which supplies buildings used for residential purposes.

FCC (USA only)

Information to user (47 CFR 15.105)

This equipment has been tested and found to comply with the limits for a Class A digital device, pursuant to Part 15 of the FCC rules. These limits are designed to provide reasonable protection against harmful interference when the equipment is operated in a commercial environment. This equipment generates, uses, and can radiate radio frequency energy and, if not installed and used in accordance with the instruction manual, may cause harmful interference to radio communications. Operation of this equipment in a residential area is likely to cause harmful interference, in which case you will be required to correct the interference at your own expense.

Information to user (47 CFR 15.21)

The user is cautioned that any changes or modifications not expressly approved by Renishaw plc or authorised representative could void the user's authority to operate the equipment.

Equipment label (47 CFR 15.19)

This device complies with part 15 of the FCC Rules. Operation is subject to the following two conditions:

1. This device may not cause harmful interference.
2. This device must accept any interference received, including interference that may cause undesired operation.

ICES-003 (Canada only)

Class A Equipment Statement (non-residential)

CAN ICES-003(A) / NMB-003(A)

042-482-0621 / master@admt.kr

문의 사항은 www.admt.kr 로 연락 부탁 드리겠습니다.

REACH regulation

Information required by Article 33(1) of Regulation (EC) No. 1907/2006 (“REACH”) relating to products containing substances of very high concern (SVHCs) is available at:

www.renishaw.com/REACH

China RoHS

Contact Renishaw plc or visit www.renishaw.com/ChinaRoHSCMM for the full China RoHS tabulation.



www.admt.kr

042-482-0621 / master@admt.kr

문의 사항은 www.admt.kr 로 연락 부탁 드리겠습니다.

TP200 safety

The PI 200-3 interface unit must be connected to a supply incorporating a protective earth conductor via a three-core mains cable (line cord).

PSU electrical ratings	
Supply voltage range	85 V - 264 V
Power frequency range	47 Hz - 63 Hz
Power consumption	10 W
Fuse type	1 A (T) HBC, 250 V

Your Renishaw probe and accessories are precision instruments. Please use and maintain the products in accordance with these instructions.

Please retain the transit box for storing the components when not in use.

CAUTION: The TP200 probe contains sensitive silicon strain sensors.

Permanent damage may be caused if the probe is dropped or subjected to severe shock as may be caused by misuse.

www.admt.kr

042-482-0621 / master@admt.kr

문의 사항은 www.admt.kr 로 연락 부탁 드리겠습니다.

TP200 environmental conditions

The PI 200-3 interface unit is specified to operate under the following conditions which comply with (or exceed) those of standard BS EN 61010-1: 1993/A2: 1995.

Protection provided by enclosure	IP30
Altitude	Up to 2000 m
Operating temperature	0 °C to 50 °C
Storage temperature	-10 °C to +70 °C
Relative humidity	Maximum 80% RH up to + 31 °C Linear decrease to a maximum 50% at + 40 °C
Transient overvoltage	Installation category II
Pollution degree	2

www.admt.kr

042-482-0621 / master@admt.kr

문의 사항은 www.admt.kr 로 연락 부탁 드리겠습니다.

TP200 introduction

The TP200 / TP200B is a 13.5 mm diameter touch-trigger probe with the facility to quickly change stylus configurations without the need for requalification. Electronic strain sensing techniques are used to improve on the form measuring accuracy and operating life that can be achieved compared with kinematic touch-trigger probes.

The TP200 probe is a two piece design comprising the probe body and a detachable stylus module that holds the stylus assembly.

The stylus module has a choice of fixed overtravels: 'SF' (standard force) or 'LF' (low force). There is also the 'EO' (extended overtravel) module which has the same overtravel force as the 'SF' but provides increased operating range and protection in the probe Z axis.

The optional SCR200 stylus change rack provides storage for pre-qualified stylus assemblies and facilitates automatic stylus changing under measurement program control.

The probe and rack are powered by the dedicated PI 200-3 interface, which performs signal processing and communicates with the CMM controller.

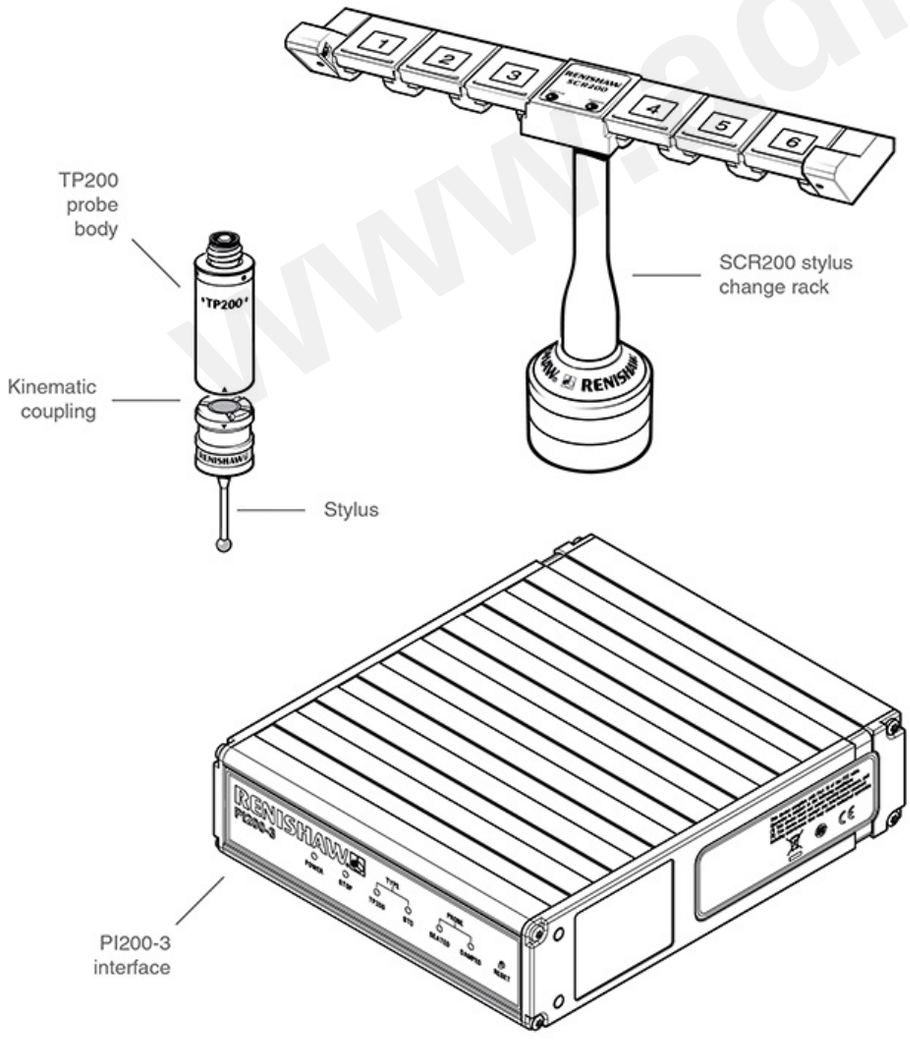

042-482-0621 / master@admt.kr

문의 사항은 www.admt.kr 로 연락 부탁 드리겠습니다.

TP200 product description

Probe body

The TP200 probe body houses the strain sensing structure and electronic processing circuitry.

When the stylus contacts the workpiece, in a normal gauging move, the force applied to the stylus tip is transferred, through the stylus module and the coupling at the front of the probe body, to the silicon strain sensors. A tip deflection of a few µm is sufficient to trigger the probe. The probe's signals are amplified and processed in a hybrid microcircuit electronic assembly. The probe's data and control signals are communicated between the probe and the PI 200-3 interface over a pair of screened wires, allowing the TP200 system to be compatible with the majority of Renishaw probe heads and accessories.

The TP200B probe body uses the same technology as the TP200 probe body but has been designed to have a higher tolerance to vibration. This helps to overcome the problem of 'air' trigger generation which can arise from vibrations transmitted through the CMM or when using long styli with fast positioning speeds.

NOTE: Renishaw does not recommend the use of TP200B with the LF module or cranked / star styli.

The stylus module is held in position on the front of the probe body by a magnetic, kinematic coupling. The coupling allows the stylus module to be removed and then replaced such that the stylus tip returns to a highly repeatable spatial position, eliminating the need for requalification.

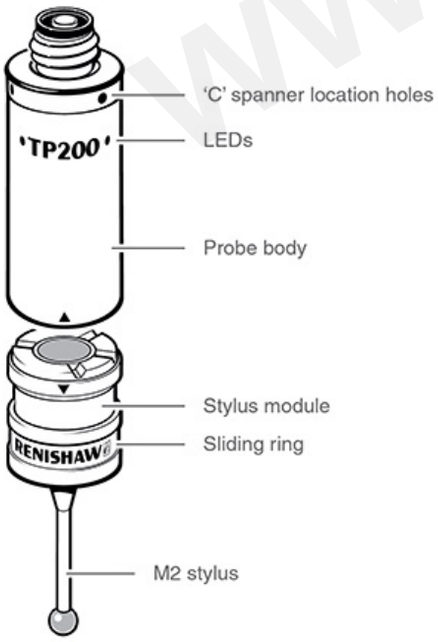

042-482-0621 / master@admt.kr

문의 사항은 www.admt.kr 로 연락 부탁 드리겠습니다.

Stylus module

The stylus module carries the M2 stylus mount and provides overtravel in the X, Y and +Z probe axes. Overtravel in the -Z probe axis is accommodated by separation of the module from the probe body.

There are three modules available, with two different overtravel forces:

1. The SF (standard force) module is suitable for most applications.
2. The LF (low force) module is recommended for use with small precision ball styli or on delicate materials.
3. The EO (extended overtravel) module is recommended for use when increasing the speed of the CMM may lead to stopping distances which exceed the overtravel range provided in the SF / LF modules. The EO module has an additional 8 mm of overtravel in the probe Z axis to protect against damage to the probe body in such circumstances. Overtravel force is the same as the SF module.

The module houses the mating half of the magnetically held kinematic coupling (see 'Assembling a stylus on a stylus module'), which ensures repeatable positioning on the probe body. The coupling consists of three bearing points formed by the V grooves on the rear of the stylus module, which seat on three ball bearings located on the front of the probe body. The fourth V groove and semi-recessed ball form an alignment feature to ensure that the module has a unique orientation in the rotational axis. The module and stylus axis will be visibly misaligned if the coupling is not correctly seated.

Alignment symbols are provided to assist manual alignment. The module cover forms a sliding ring (see 'Probe body'), which transfers excess force to the case of the probe body if the maximum Z axis overtravel distance is exceeded.

PI 200-3 interface

The PI 200-3 interface unit powers and services the TP200 / TP200B probe and up to two SCR200 stylus change racks. The PI 200-3 will service kinematic switching probes (TP2, TP20, TP6), in addition to the TP200 / TP200B. The PI 200-3 automatically recognises the probe type, determines the status of the probe and transmits probe trigger signals to the CMM controller.

When automatic stylus changing is performed using the SCR200 change rack, the PI 200-3 inhibits probe triggering and resets the TP200 / TP200B probe to account for the loading effects of the new stylus assembly on the strain sensors. In the event of rack overtravel or error condition, the PI 200-3 transmits signals to the CMM controller to stop CMM motion.

During high speed position moves (fast traverse), it is necessary to reduce probe sensitivity to prevent vibration causing unwanted triggers. The CMM controller automatically switches the PI 200-3 into a low sensitivity mode, such that vibration triggers are prevented. However, a trigger is still issued to stop CMM motion, if an unexpected collision occurs. This mode is known as 'probe damped mode' and is indicated by an LED on the PI 200-3 front panel.

NOTE: The probe cannot take accurate points when damped mode is selected.

The CMM manufacturer sets the configuration of the PI 200-3 and it should not be necessary for the user to make adjustments except to operate the reset button, as explained later in this handbook.

042-482-0621 / master@admt.kr

문의 사항은 www.admt.kr 로 연락 부탁 드리겠습니다.

SCR200 stylus change rack

The SCR200 holds and protects up to six stylus modules for automatic changing. The modules are magnetically held in the docking ports, which allows the rack to be mounted in any orientation and eliminates the need for high accuracy positioning. No special commands are necessary, as stylus changing requires only simple position moves to be programmed.

The SCR200 incorporates a system of infrared light beams and a Hall effect sensor to detect the presence of the probe and to signal to the PI 200-3 interface that stylus changing is in progress. A self-test mode checks operation of the light beams during power-up.

The rack is provided with an overtravel mechanism to reduce the possibility of damage should a collision occur. When the mechanism is deflected, signals are transmitted to the CMM controller to stop CMM motion. The overtravel mechanism is self-resetting. After a collision, the rack should return to its normal operating position and should not require re-datuming.

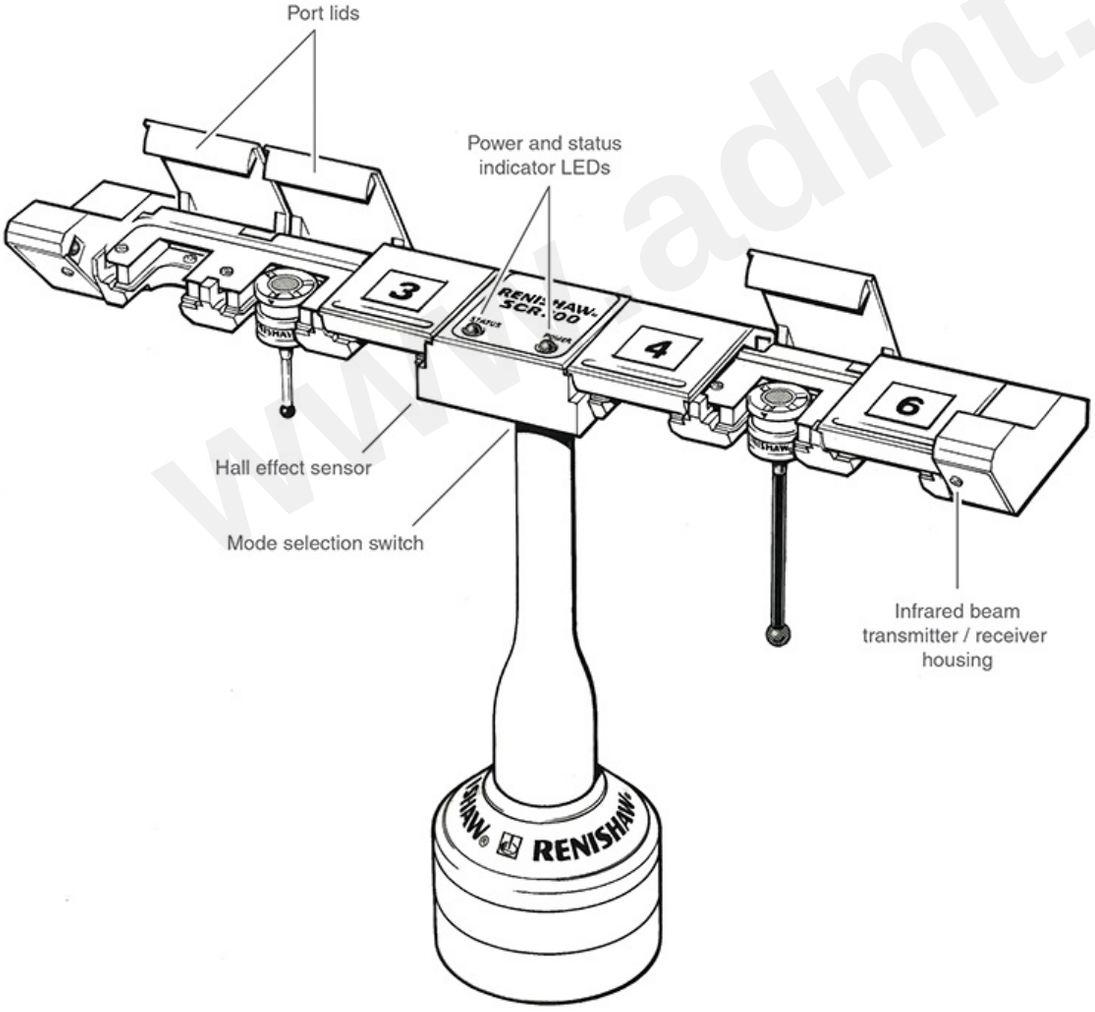

042-482-0621 / master@admt.kr

문의 사항은 www.admt.kr 로 연락 부탁 드리겠습니다.

TP200 specification

Measuring performance

The following data is derived from test rig measurements and may not represent the performance achievable on a CMM. Please contact your CMM supplier for overall system accuracy information.

NOTES: Tested with standard Renishaw M2 steel and GF styli gauging speed 8 mm/s.
Repeatability and XY (2D) form measurements as specified to Renishaw in-house test standards.
3D form measurements as specified to standard ASME B89.4.1-1997 for point-to-point probing.

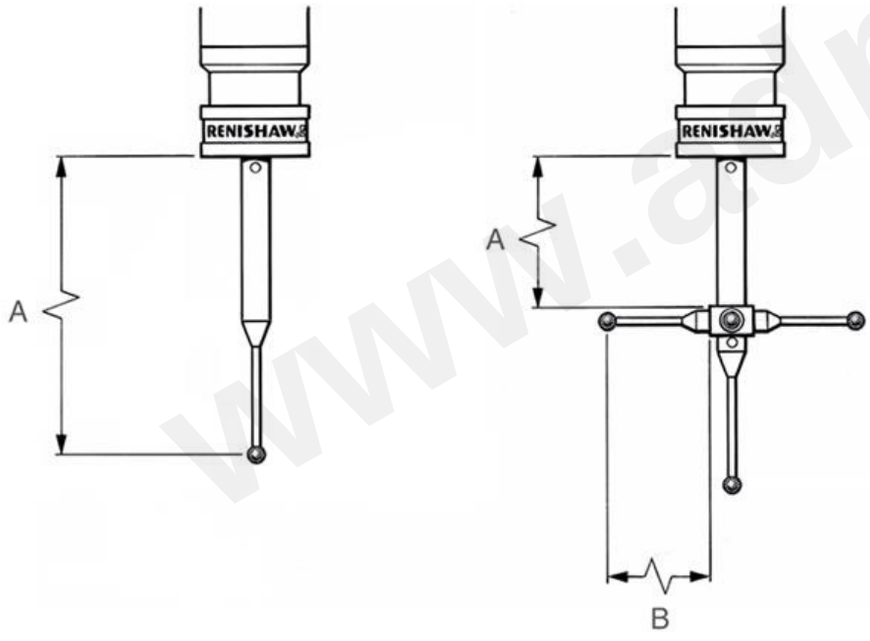

Unidirectional repeatability (2σ µm)

Stylus type	Offset length A (mm)	Offset length B (mm)	Trigger level 1 (µm)	Trigger level 2 (µm)
Straight	10	-	0.2	0.25
Straight	50	-	0.4	0.5
Straight	70	-	0.7	1
Straight	100	-	1	1.2
Star	5	20	0.5	0.7
Star	50	20	0.7	1

042-482-0621 / master@admt.kr

문의 사항은 www.admt.kr 로 연락 부탁 드리겠습니다.

XY (2D) form measurement deviation

Stylus type	Offset length A (mm)	Offset length B (mm)	Trigger level 1 (µm)	Trigger level 2 (µm)
Straight	10	-	±0.4	±0.5
Straight	50	-	±0.8	±0.9
Straight	70	-	±0.9	±1.5
Straight	100	-	±1.7	±2
Star	5	20	±1	±1.2
Star	50	20	±1	±1.2

XYZ (3D) form measurement deviation

Stylus type	Offset length A (mm)	Offset length B (mm)	Trigger level 1 (µm)	Trigger level 2 (µm)
Straight	10	-	±0.65	±0.9
Straight	50	-	±1	±1.4
Straight	70	-	±2	±3
Straight	100	-	±4	±5.5
Star	5	20	±1.5	±2.2
Star	10	20	±3	±4

Repeatability of stylus change

Automatic change with SCR200	Manual change
1 µm max.	2 µm typical

Overtravel forces

Standard force module

Stylus length	XY axis low force (g)	XY axis high force (g)	Z+ axis (g)
20 mm at typical overtravel	45	70	490
50 mm at typical overtravel	20	40	490
50 mm at max. overtravel	25	50	1500

042-482-0621 / master@admt.kr

문의 사항은 www.admt.kr 로 연락 부탁 드리겠습니다.

Low force module

Stylus length	XY axis low force (g)	XY axis high force (g)	Z+ axis (g)
20 mm at typical overtravel	20	30	160
50 mm at typical overtravel	10	15	160
50 mm at max. overtravel	15	25	450

Overtravel limits

XY axis	Z+ axis	Z- axis
±14°	4.5 mm (SF / LF) 12.5 mm (EO)	4 mm

Technical data

Trigger forces	0.02 N (2 gF) (at 50 mm stylus tip)
Gauging speed range	0.5 mm/s - 80 mm/s
Trigger rate	5 triggers/s max
Sense directions	6 way: ±X, ±Y, ±Z
Module life	>10 million triggers
Module pull-off force	800 g to 1000 g
Probe cable length	Max 50 m × 0.22 mm^2
Probe cable resistance	Max 5Ω / conductor
Operating temperature range	+10 °C to +40 °C
Storage temperature range	-10 °C to +70 °C
Probe length	43 mm
Probe diameter	13.5 mm
Probe connector	M8 × 1.25 × 5 mm
Stylus mount	M2 × 0.4 mm
Sealing	IP30
Weight	15 g (sensor) 7 g (module)

www.admt.kr

042-482-0621 / master@admt.kr

문의 사항은 www.admt.kr 로 연락 부탁 드리겠습니다.

Dimensions

TP200 probe system

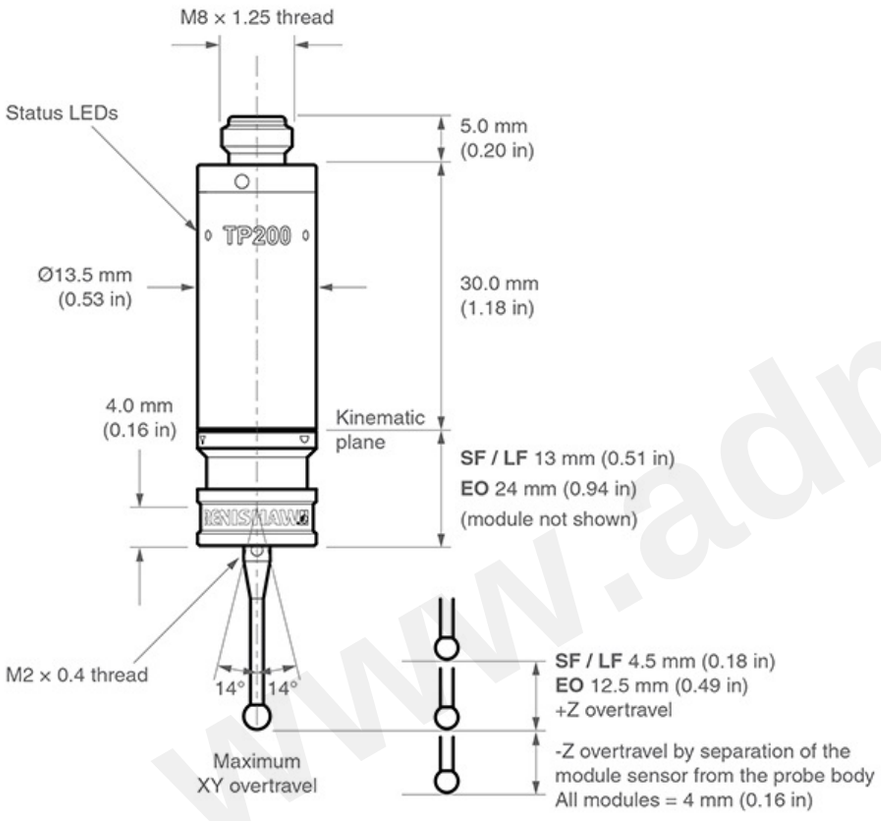

www.admt.kr

042-482-0621 / master@admt.kr

문의 사항은 www.admt.kr 로 연락 부탁 드리겠습니다.

SCR200

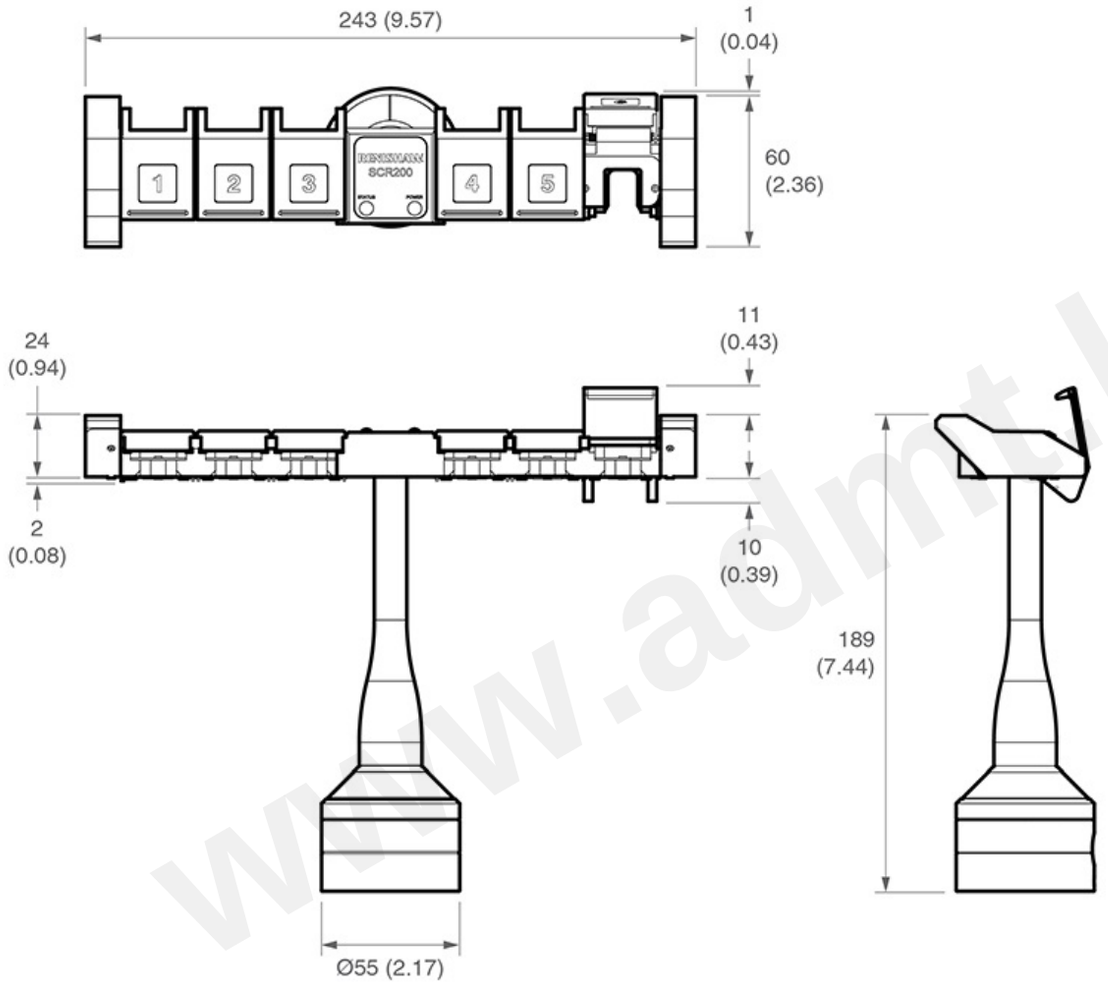

www.admt.kr

042-482-0621 / master@admt.kr

문의 사항은 www.admt.kr 로 연락 부탁 드리겠습니다.

Installation procedure - TP200 probe

Mounting the probe body on the probe head

CAUTION: Take great care not to drop the probe when installing.

Mount the probe body on the probe head before fitting a stylus module.

Probe heads with M8 connector

- Screw the threaded end of the probe body into the M8 connector, on the probe head, until it is finger-tight
- Fit the S1 'C' spanner (supplied) to the location holes and tighten by hand
- The recommended tightening torque is 0.3 Nm - 0.5 Nm

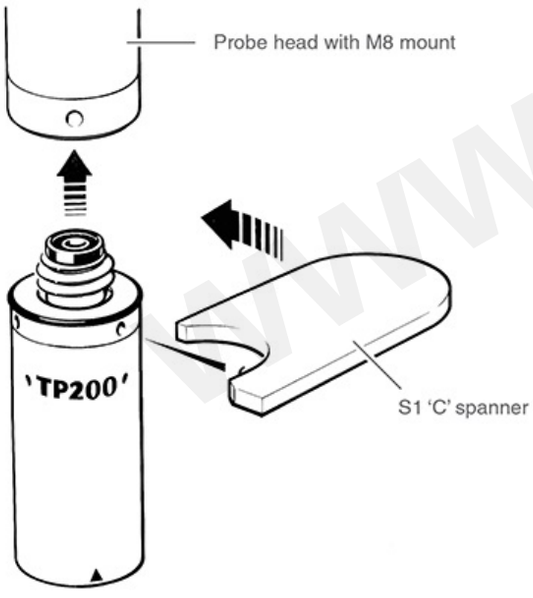

www.admt.kr

042-482-0621 / master@admt.kr

문의 사항은 www.admt.kr 로 연락 부탁 드리겠습니다.

Probe heads with Renishaw autojoint

- Before fitting to the probe head, screw the probe body to a PAA series adaptor, as instructed above for M8 heads
- Locate the adaptor on the probe head and lock the autojoint using an S10 key

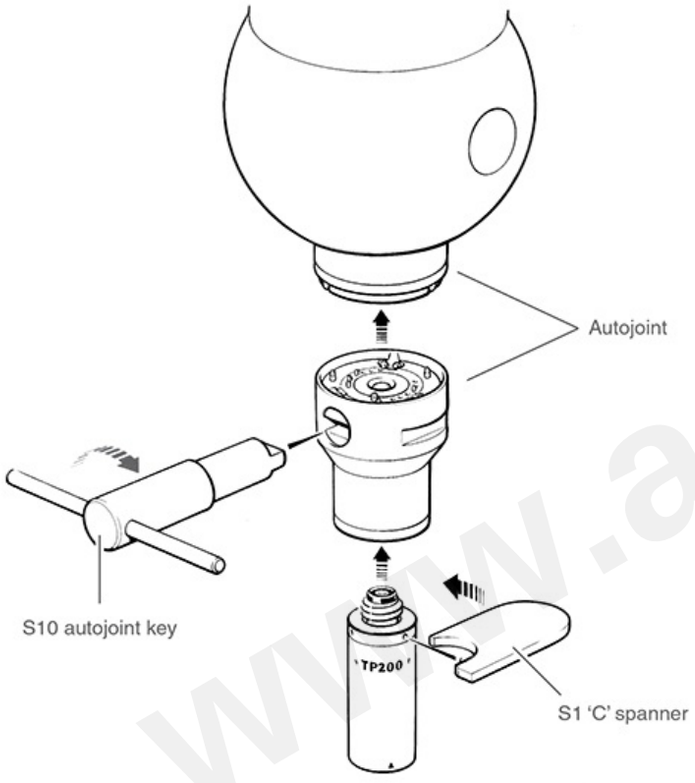

www.admt.kr

042-482-0621 / master@admt.kr

문의 사항은 www.admt.kr 로 연락 부탁 드리겠습니다.

Assembling a stylus on a stylus module

For a one-piece stylus, screw the stylus into the threaded mount on the stylus module until finger-tight. Fit an S7 pin spanner (supplied) into the stylus cross-hole and tighten using finger pressure to achieve the recommended torque of between 0.05 Nm and 0.15 Nm.

NOTE: The maximum permissible torque is 0.3 Nm.

Where an offset or star stylus arrangement is to be used, assemble the arrangement loosely and offer the module up to the probe body to check alignment. Adjust the alignment with the module removed and tighten as described above using one or two S7 pin spanners as necessary.

Styli from the Renishaw GF (carbon fibre reinforced plastic) range must be tightened using the S20 tightening tool (supplied with the stylus kit). When tightening GF styli or extension pieces do not apply torque to the stylus stem. It may be necessary to use two S20 tools or S20 and S7 tools in combination to tighten adjacent threaded couplings. Refer to the instruction leaflet (Renishaw part number H-1000-4003) provided with the stylus kit.

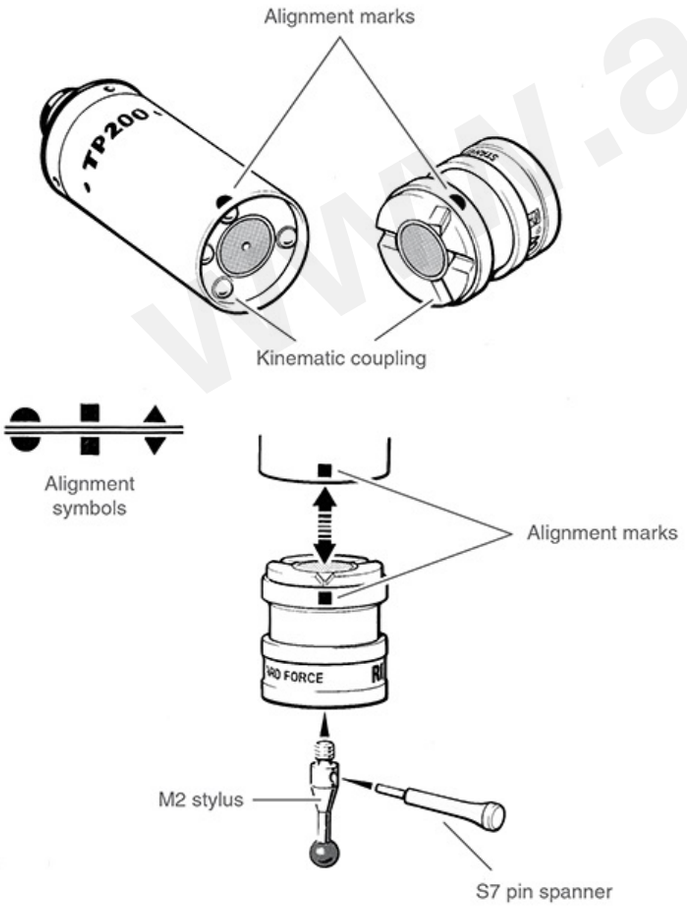

042-482-0621 / master@admt.kr

문의 사항은 www.admt.kr 로 연락 부탁 드리겠습니다.

Mounting the stylus module on the probe body

Visually examine the mating faces of the stylus module and the probe body for dirt or other contamination. Clean if necessary using the CK200 cleaning material (supplied), (refer to the 'Maintenance' section).

Offer up the stylus module to the probe body ensuring that the alignment symbols are matched. Allow the stylus module to engage under the pull of the magnetic force.

Reset the probe as described in the following section 'Resetting the probe'.

Resetting the probe

Press the RESET button, on the front panel of the PI 200-3 interface, for two seconds to reset the probe to the seated (armed) state.

CAUTION: Probe triggers are inhibited when the RESET button is pressed. Before pressing the button, the CMM must be stationary with the probe stylus clear of the workpiece.

NOTE: When the TP200 is mounted on a motorised head, the action of unlocking and locking the head will perform the same function as the RESET button.

www.admt.kr

042-482-0621 / master@admt.kr

문의 사항은 www.admt.kr 로 연락 부탁 드리겠습니다.

TP200 probe operation

The TP200 probe has two normal operating states - armed or triggered. The probe should be in the armed state except for the moments when the stylus is deflected against the workpiece.

Probe armed

When the probe is armed (sometimes called 'seated' or 'reset') the following PI 200-3 front panel indicators will be ON:

- POWER ON
- TYPE - TP200
- PROBE - SEATED

Additionally, the probe head LED will be ON and the LEDs on the TP200 probe body will be OFF. The probe LEDs may sometimes glow slightly, indicating a low level of background vibration.

Probe triggered

When the stylus touches the workpiece the LEDs on the probe body turn ON brightly. The SEATED and probe head LEDs will turn OFF.

The probe should be allowed to remain in the triggered state only for the minimum time necessary to reverse the CMM motion and back-off from the workpiece.

If the probe remains in the triggered state for more than 10 seconds, drift of the stylus zero reference position will occur and the PI 200-3 will emit an audible warning. Back-off the probe from the workpiece and refer to 'Resetting the probe'.

Changing a stylus module manually

Ensure the CMM will remain stationary, in a safe condition.

Remove the stylus module and store safely.

To fit another module, refer to the 'Mounting the stylus module to the probe body' section.

When using MH8 or MIH probe heads, unlock and relock the head before resetting the probe.

Reset the probe, refer to the 'Resetting the probe' section.

Operation with a manual probe head

After manually re-orientating the probe when using PH1, MH8 or MIH probe heads, reset the probe. Refer to the 'Resetting the probe' section.

042-482-0621 / master@admt.kr

문의 사항은 www.admt.kr 로 연락 부탁 드리겠습니다.

Stylus module selection

The SF module is satisfactory for the majority of applications and provides the maximum stylus carrying capability.

The LF module should be employed where the application necessitates the use of styli with ball diameters less than 1 mm, particularly the PS29R (Renishaw part number A-5000-7800), or where lower overtravel force will reduce the risk of marking or deflecting the surface of the workpiece.

The EO module is recommended for use when increasing the speed of the CMM may lead to stopping distances which exceed the overtravel range provided in the SF / LF modules.

NOTE: The overtravel force, in the X-Y axis, varies with both direction and displacement for a given stylus length. In the X-Y axis there is a pattern of three maximum and minimum force directions as illustrated in figure below:

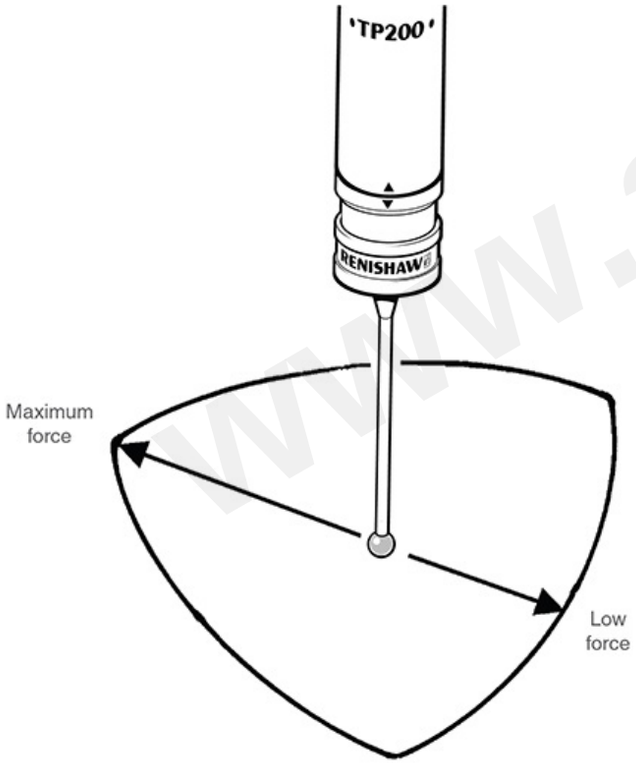

www.admt.kr

042-482-0621 / master@admt.kr

문의 사항은 www.admt.kr 로 연락 부탁 드리겠습니다.

Stylus selection

To obtain the best performance apply the following considerations when selecting and fitting a stylus:

- Use the shortest possible stylus length
- Minimise the mass of the stylus by using the types with ceramic or GF stems where possible - refer to the Renishaw stylus catalogue for further information
- Work within the recommended stylus limits
- Ensure that stylus balls, threads and mating faces are kept clean
- Tighten styli using only the tools provided
- Use the stylus changing facility to optimise the styli for accuracy and feature access
- Always qualify the styli at the gauging speed set for the part measurement program. If the speed is changed re-qualify the stylus tips

Recommended stylus limits

The absolute maximum stylus carrying ability of the TP200 probe is determined by the mass of the stylus and the distance from the stylus holder to the centre of gravity. The limits are:

Low force module	Standard force module
3 g at 20 mm	8 g at 50 mm

In practice, the stylus carrying is restricted by CMM vibration level, probe orientation and CMM controller flexibility. The recommended limits are given in the figures below.

It may be possible to exceed the recommended limits but the user is advised to conduct trials to establish the suitability for the application and the effect on measuring performance.

Recommended stylus limits - LF module:

042-482-0621 / master@admt.kr

문의 사항은 www.admt.kr 로 연락 부탁 드리겠습니다.

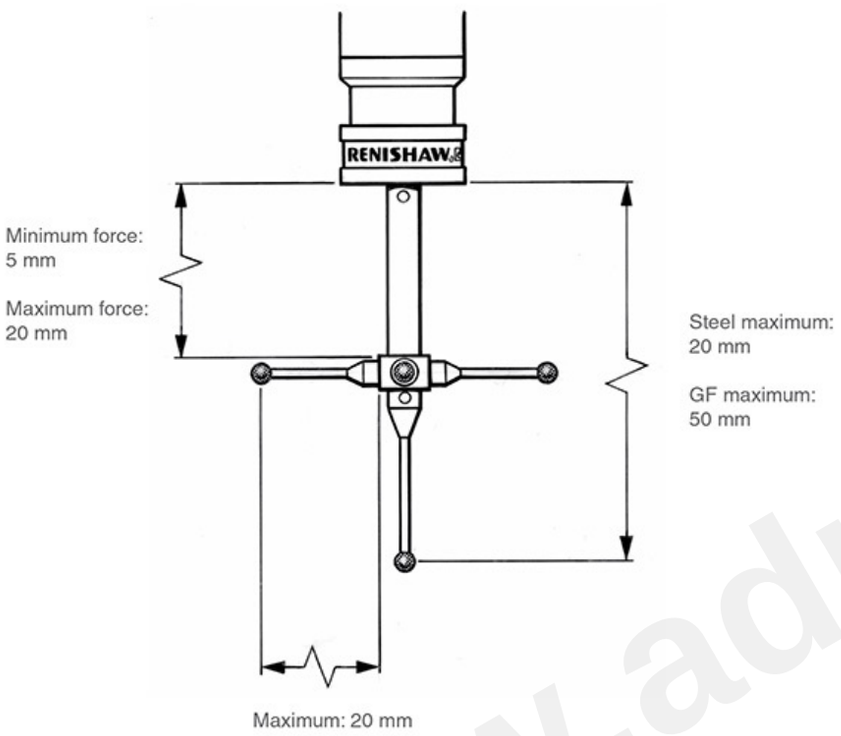

www.admt.kr

042-482-0621 / master@admt.kr

문의 사항은 www.admt.kr 로 연락 부탁 드리겠습니다.

Recommended stylus limits - SF / EO modules:

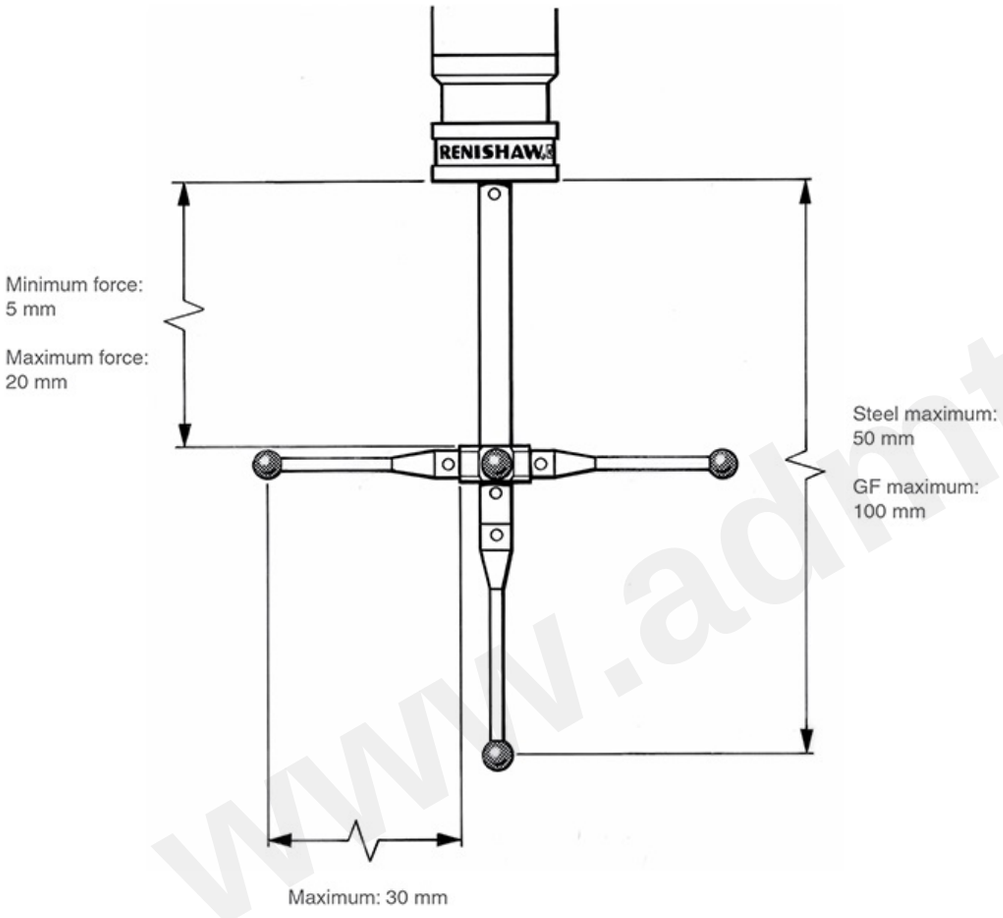

www.admt.kr

042-482-0621 / master@admt.kr

문의 사항은 www.admt.kr 로 연락 부탁 드리겠습니다.

Trigger level

Under certain conditions, vibration may cause false 'air' triggers during gauging and it may be necessary to reduce the probe sensitivity. False triggers may occur when large or heavy stylus arrangements are used, or where there is floor transmission from nearby machinery or vehicles.

- Trigger level 1 - the highest sensitivity mode, provides the best measuring accuracy
- Trigger level 2 - lower sensitivity to vibration but with a small loss of measuring accuracy

The trigger level is selected by switch 10 on the rear panel of the PI 200-3 interface:

- Level 1 - switch 10 DOWN
- Level 2 - switch 10 UP

NOTE: For versions of the PI 200-3 prior to V9, the trigger level was adjusted by switch 11.

The trigger level selection does not affect sensitivity when the probe is in damped mode.

Please consult your CMM supplier before making any adjustment to the PI 200-3 settings.

All stylus tips must be re-qualified after changing the trigger level.

www.admt.kr

042-482-0621 / master@admt.kr

문의 사항은 www.admt.kr 로 연락 부탁 드리겠습니다.

Installation procedure - SCR200 rack

Mounting the SCR200 rack on the CMM

- Place the location piece over a threaded insert at the desired location on the CMM table and screw down using a M8 or M10 bolt and hexagon key (supplied).
- A special location piece with integral bolt is available for M12 inserts (Renishaw part number M-1371-0298). If using this tighten using an S1 'C' spanner (supplied with the probe kit).
- Locate the base of the SCR200 rack over the location piece and partially tighten the fixing screw using the 1.5 mm AF hexagon key (supplied).
- Before fully tightening the fixing screw, rotate the rack and align with the CMM axes as described in the following procedure.

NOTES: Your CMM supplier's instructions will indicate the preferred method of alignment. Alignment of the SCR200 with the CMM axes may be essential for some measurement programs or may be desirable for ease of programming.

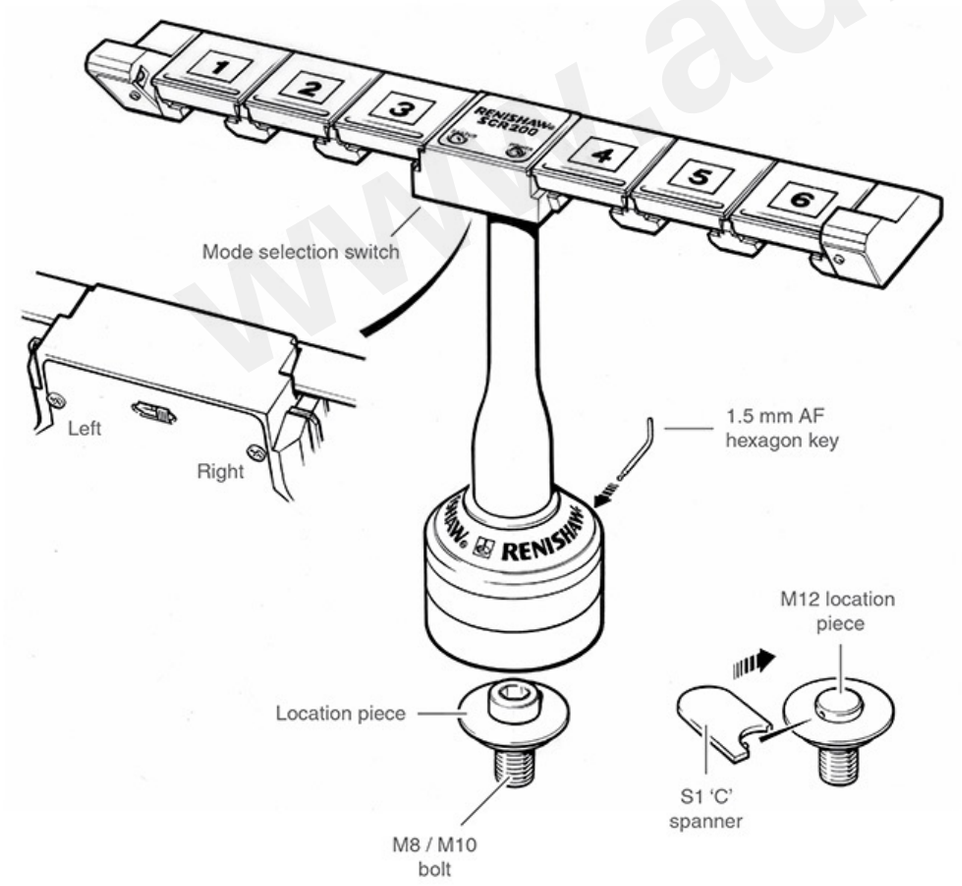

042-482-0621 / master@admt.kr

문의 사항은 www.admt.kr 로 연락 부탁 드리겠습니다.

Aligning the SCR200 rack to the CMM axes

- Align the rack approximately by eye.
- Take points P1 and P2 (see 'Datuming the SCR200 rack').
- Carefully rotate the rack until the runout between points P1 and P2 is less than 0.2 mm.
- Tighten the fixing screw using the 1.5 mm AF hexagon key (supplied).

Datuming the SCR200 rack

Renishaw recommends that the PS2R stylus (supplied) is used to datum the SCR200 rack.

NOTE: For racks previously supplied with a PS35R stylus, the instructions are identical.

If a different stylus is used, the length (L) (minimum 20 mm) and the ball radius (R) must be used to calculate offsets.

The following instructions assume uncompensated probing points are taken. Therefore, the target positions for stylus module changing are given in absolute machine coordinates. The X, Y, Z axis system refers to the rack axes indicated in the following figure:

www.admt.kr

042-482-0621 / master@admt.kr

문의 사항은 www.admt.kr 로 연락 부탁 드리겠습니다.

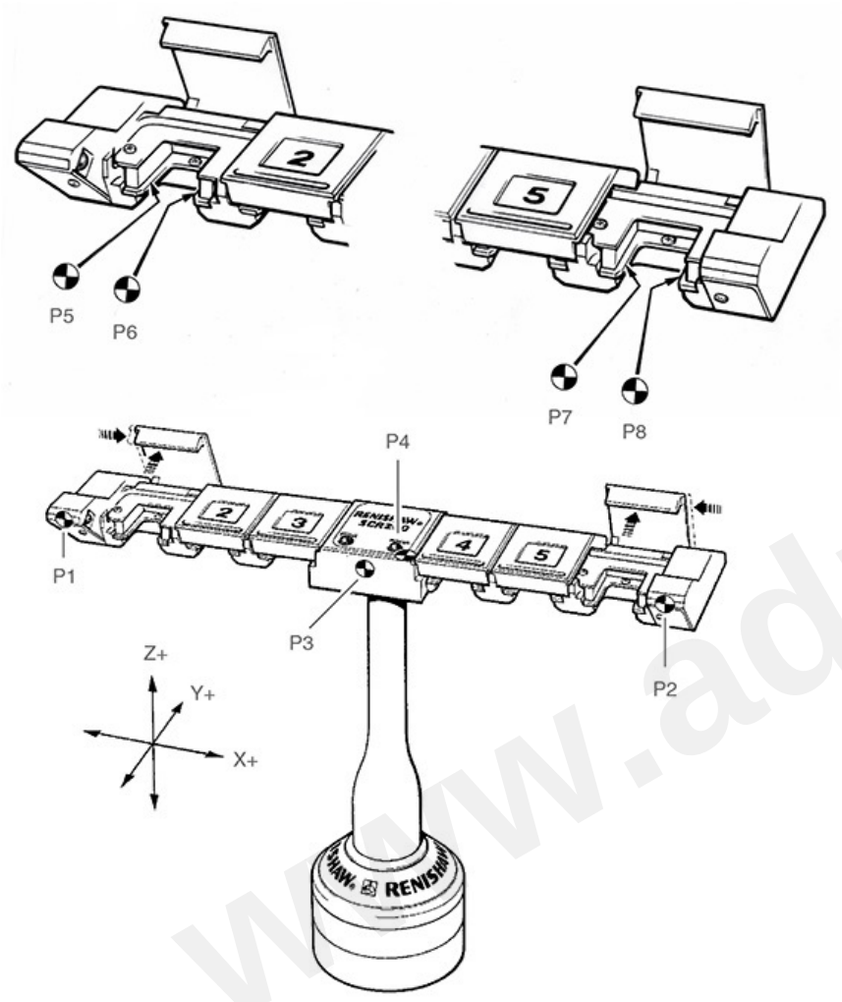

IMPORTANT:

The SCR200 rack must NOT be connected to the PI 200-3 interface when performing the datuming procedure.

- Remove the electrical connector before datuming the rack
- Open the lids of ports 1 and 6 and latch in position by sliding towards the centre of the rack

Establishing the docking depth (Y)

- Take point P3
- The docking depth for all ports is: {Y = P3 + R (1 mm) + 14.0 mm}

Establishing the docking height (Z)

- Take point P4 on the top face, ensuring that the point is not taken on the label
- The docking height for all ports is: {Z = P4 – L (20 mm) – R (1 mm) – 18.6 mm}

042-482-0621 / master@admt.kr

문의 사항은 www.admt.kr 로 연락 부탁 드리겠습니다.

Establishing the X-axis docking centres for ports 1, 2 and 3 (X1, X2, X3)

- Take points P5 and P6 using the stylus shank to gauge the edges of the module retention plate in port 1
- The docking centre for port 1: {X1 = centre point P5/P6}
- The docking centre for port 2: {X2 = X1 + 30 mm}
- The docking centre for port 3: {X3 = X1 + 60 mm}

Establishing the X-axis docking centres for ports 4, 5 and 6 (X4, X5, X6)

- Take points P7 and P8 using the stylus shank to gauge the edges of the module retention plate in port 6
- The docking centre for port 6 is: {centre point P7/P8 = X6}
- The docking centre for port 4: {X4 = X6 - 60 mm}
- The docking centre for port 5: {X5 = X6 - 30 mm}

Summary of docking target coordinates

- Port 1 = X1, Y, Z
- Port 2 = X2, Y, Z
- Port 3 = X3, Y, Z
- Port 4 = X4, Y, Z
- Port 5 = X5, Y, Z
- Port 6 = X6, Y, Z

CAUTION: The constant Y value assumes the SCR200 is aligned to your CMM axes or is using its own coordinate system.

After datuming the rack

- Close the lids of ports 1 and 6
- Select the operating mode (Tamper proof ON or OFF, refer to the 'Operating modes' section)
- Connect the cable to the PI 200-3 interface and observe the POWER and STATUS LEDs for correct indication
- Refer to the 'Loading stylus modules into the rack' section

042-482-0621 / master@admt.kr

문의 사항은 www.admt.kr 로 연락 부탁 드리겠습니다.

SCR200 electrical connection

Suitable cables for connection of the SCR200 rack to the PI 200-3 interface are available from Renishaw in three standard lengths:

Cable name	Part number	Length
PL63	A-1016-7630	5 m (196.85 in)
PL64	A-1016-7631	10 m (393.7 in)
PL65	A-1016-7632	15 m (590.55 in)

For applications requiring a second rack, a dual rack splitter cable is available.

Cable name	Part number	Length
PL97	A-1016-7660	260 mm (10.24 in)

NOTE: 2 × standard rack cables of the correct length will be required in addition to the dual SCR200 adaptor cable, which must be installed at the PI 200-3 end.

www.admt.kr

042-482-0621 / master@admt.kr

문의 사항은 www.admt.kr 로 연락 부탁 드리겠습니다.

SCR200 rack operation

Operating modes

The SCR200 may be operated in either of two modes depending on the application requirements and whether the SCR200 is accessible in normal operation.

With TAMPER PROOF ON selected, the stylus change cycle is initiated by moving the probe across the face of the Hall sensor, for the rack to detect the presence of the probe before entering a docking port. In this mode, interruption of the light beams alone does not inhibit probe triggering and therefore the probe cannot be accidentally inhibited during normal operation. For example by placing fingers in the light beam or by operating a port lid.

With TAMPER PROOF OFF selected, direct entry to the rack ports is allowed. The light beams detect the probe entering a module docking port and inhibit probe triggers. In this mode faster stylus changing is possible but Renishaw recommend that it is used only in situations where access to the rack is restricted when the CMM is operating automatically.

To select the operating mode

- Remove the electrical connector
- Move the mode selection slide switch (see 'Mounting the SCR200 rack on the CMM') - LEFT for tamper proof ON, RIGHT for tamper proof OFF
- Replace the electrical connector
- Confirm that the POWER and STATUS lamps are indicating the correct mode

Loading stylus modules into the rack

Renishaw recommends that the stylus modules are mounted on the probe body by hand. An automatic stylus change routine is completed prior to tip qualification then the stylus module is loaded into the rack.

The CMM should be used to load the stylus modules into the rack by following the 'Stylus module changing procedure'.

It is possible to load the rack by hand but care must be taken to ensure correct rotational alignment, as there is no warning if a module is incorrectly seated on the probe sensor and gross measurement errors will occur.

042-482-0621 / master@admt.kr

문의 사항은 www.admt.kr 로 연락 부탁 드리겠습니다.

Power and status indicators

Two LEDs are located on the top face of the rack:

1. POWER - green
2. STATUS - red

Power	Status	SCR200 mode
OFF	Flashing for 10 s	Self-test, tamper proof ON
OFF	Flashing for 5 s	Self-test, tamper proof OFF
ON	OFF	Rack idle, tamper proof ON
ON	ON	Rack idle, tamper proof OFF
ON	Flashing	Stylus changing
Flashing	Flashing	Self-test failed

Stylus module changing procedure

Storing a stylus module - tamper proof ON

Refer to the 'Datuming the SCR200 rack' section for definitions of coordinate X(n), Y, Z.

1. Move to the START coordinate for activating the Hall sensor: {Xs, Ys, Z}, where Xs = X1 + 82 mm and Ys = P3 + R (1 mm) - 7.5 mm.

2. Move along the X- axis to: {Xs - 12 mm} at a minimum speed of 5 mm/s.

3. Move along the X axis to the centre line of the required vacant port (n): {X(n), Ys, Z}.

NOTE: If the stylus assembly has an offset or star component projecting along the Y+ axis, it is permissible (after step 1) to move out along the Y- axis and exit the light beam for a maximum of 5 s, to avoid a collision with the SCR200 leg or another stored stylus.

4. Move along the Y+ axis to the docking target coordinate for port (n): {X(n), Y, Z}

5. Move along the Z+ axis to the release coordinate: {X(n), Y, Zr} where Zr = Z + 3 mm.

6. Move along the Y- axis to a coordinate clear of the port lid: {X(n), Ys, Zr}

042-482-0621 / master@admt.kr

문의 사항은 www.admt.kr 로 연락 부탁 드리겠습니다.

Storing a stylus module - tamper proof OFF

Refer to the previous procedure ('Storing a stylus module - tamper proof ON') omitting steps 1 and 2.

NOTE: It is not necessary to stop CMM motion at the start coordinate in this mode, provided that the port is entered along the Y+ axis at the specified X(n) and Z axis positions.

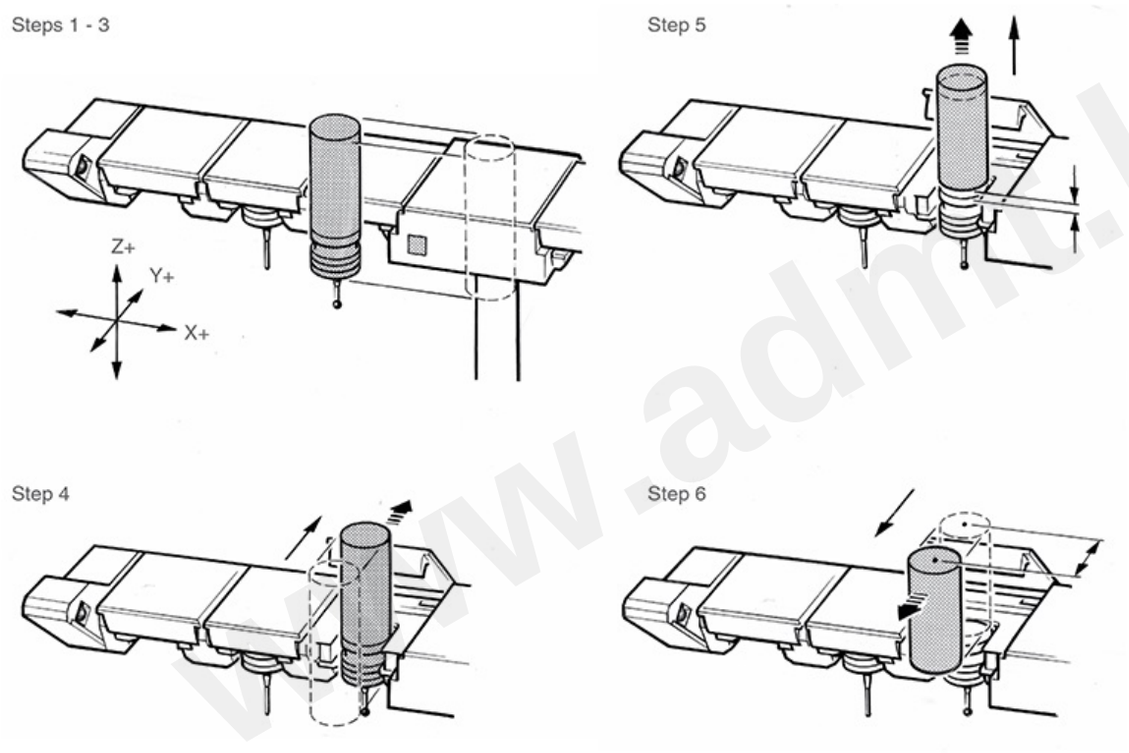

042-482-0621 / master@admt.kr

문의 사항은 www.admt.kr 로 연락 부탁 드리겠습니다.

Picking up a stylus module

This procedure is applicable to both operating modes. Refer to the section 'Datuming the SCR200 rack' for definitions of coordinate X(n), Y, Z.

1. From the previous port coordinate: {X(n), Ys, Zr}, move along the X axis to the port (n) containing the required stylus module: {X(n), Ys, Zr}
2. Move along the Y+ axis to the port centre: {X(n), Y, Zr}
3. Move along the Z- axis to the docking target coordinate for port (n): {X(n), Y, Z}
4. Move along the Y- axis to a coordinate clear of the port lid: {X(n), Ys, Z}

Proceed with the part measurement program.

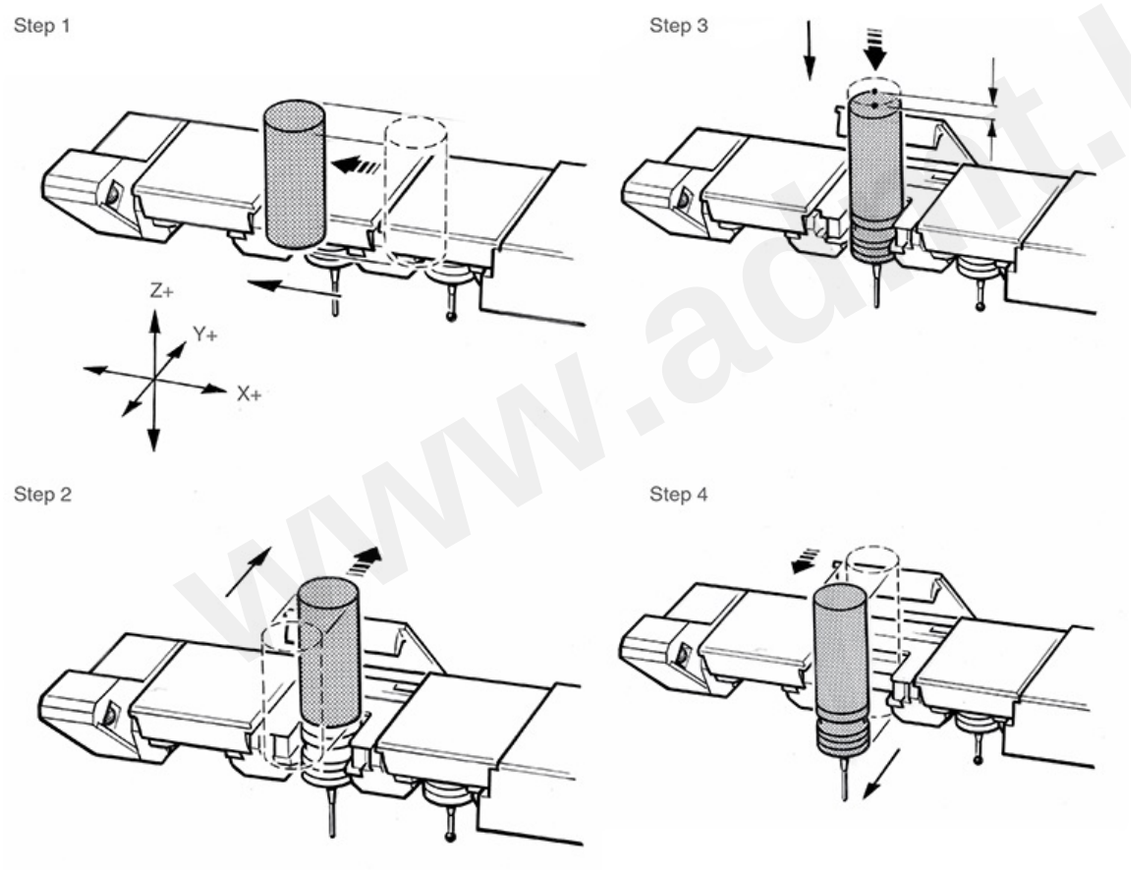

www.admt.kr

042-482-0621 / master@admt.kr

문의 사항은 www.admt.kr 로 연락 부탁 드리겠습니다.

TP200 maintenance

TP200 probe body and stylus module

The kinematic coupling mechanism, connecting the probe body to the stylus module, incorporates precision ball / V groove seatings. The coupling mechanism has been tested in a wide range of environments and is highly tolerant of non-metallic dust, but regular inspection and cleaning with the CK200 material (supplied) is recommended to ensure continued high performance. Instructions for use are included with the cleaning material (Renishaw part number A-1085-0016).

The user should determine the frequency of cleaning according to the conditions of use.

Stylus balls, threads and mating faces should be cleaned with a proprietary cleaning cloth or solvent.

Stylus modules that are not in use should be stored in spare ports in the SCR200 rack or in their transport boxes.

SCR200 rack

Periodic cleaning of the rack ports, lids and outer surfaces using a proprietary cleaning cloth, is recommended to prevent contamination of the modules.

www.admt.kr

042-482-0621 / master@admt.kr

문의 사항은 www.admt.kr 로 연락 부탁 드리겠습니다.

TP200 fault finding

The CMM will not register a probe trigger, but the probe operates normally when the stylus is deflected by hand:

PI 200-3 indicators	Possible causes	Remedy
'STOP' lamp ON 'TP200' lamp ON 'SEATED' LED operates normally	The CMM controller or a Renishaw system has activated STOP signal. SCR200 overtravel mechanism is deflected.	Check status of Renishaw motorised probe head or other systems. Clear obstruction and allow overtravel mechanism to reset.

The probe fails to trigger and the probe LEDs glow only dimly when the stylus touches the workpiece, but the probe operates normally when the stylus is deflected by hand:

PI 200-3 indicators	Possible causes	Remedy
'SEATED' LED ON	The trigger speed is too slow. The stylus is too heavy.	Probe normally to the workpiece surface. Increase gauging speed.

The probe will not arm or the probe does not stay armed when the RESET button is released. The probe LEDs are always OFF:

PI 200-3 indicators	Possible causes	Remedy
'STD' LED ON 'SEATED' LED OFF	Probe sensor faulty. Probe wiring open circuit.	Remove probe and test by substitution. Check wiring from probe to PI 200-3 interface.

The probe will not arm or the probe does not stay armed when the RESET button is released. The probe LEDs are always ON:

PI 200-3 indicators	Possible causes	Remedy
'TP200' LED ON 'SEATED' LED OFF	Probe sensor faulty or damaged by collision.	Remove probe and test by substitution.

False ('air') triggers occur while the CMM is stationary and the probe LEDs flicker:

PI 200-3 indicators	Possible causes	Remedy
'TP200' LED ON 'SEATED' LED operates normally	Probe sensor faulty Probe loose in probe head Excessive vibration from external source Excessive vibration from CMM	Remove probe and test by substitution Correctly tighten probe Remove cause or isolate CMM Check CMM air supply Maintain CMM air bearing system

042-482-0621 / master@admt.kr

문의 사항은 www.admt.kr 로 연락 부탁 드리겠습니다.

False ('air') triggers occur at gauging speed and the probe LEDs flicker:

PI 200-3 indicators	Possible causes	Remedy
'DAMPED' LED is OFF 'SEATED' LED operates normally	Stylus is too large or heavy Excessive vibration from CMM	Use stylus arrangements within recommendations Check CMM air supply Maintain CMM air bearing system

False ('air') triggers occur at traverse speed and the probe LEDs flicker:

PI 200-3 indicators	Possible causes	Remedy
'DAMPED' LED is ON 'SEATED' LED operates normally	Stylus is too large or heavy Excessive vibration from CMM Traverse speed is too high	Use stylus arrangements within recommendations Check CMM air supply Maintain CMM air bearing system Reduce traverse speed

The probe triggers during an SCR200 stylus change:

PI 200-3 indicators	Possible causes	Remedy
'SEATED' LED operates normally	The SCR200 is not connected to the PI 200-3 Incorrect SCR200 operating mode	Check SCR200 indicator lamps Re-connect cable

There is an unexpected loss of accuracy:

PI 200-3 indicators	Possible causes	Remedy
'TP200' LED ON 'SEATED' LED operates normally	Stylus ball is damaged or dirty. Stylus is too large or heavy. The probe is loose or not correctly assembled. The kinematic coupling is damaged or dirty. The gauging speed has been changed. The trigger threshold has been changed.	Inspect and clean stylus ball, or replace and re-qualify the stylus. Use stylus arrangements within recommendations. Check the stylus joints. Ensure the module is correctly seated and the probe is tight in the probe head. Inspect and clean the kinematic coupling. Re-qualify stylus tips.

Deflection alarm active:

PI 200-3 indicators	Possible causes	Remedy
Audible indicator ON	The stylus is or was deflected for >10 s. Stylus module was changed manually.	Move the stylus clear of any obstruction and press the RESET button

042-482-0621 / master@admt.kr

문의 사항은 www.admt.kr 로 연락 부탁 드리겠습니다.

TP200 accessories

High performance styli

For applications requiring styli longer than 40 mm, the Renishaw range of lightweight ‘GF' styli and extension pieces are recommended.

These are available individually or as a boxed kit (Renishaw part number A-5003-2310). See the stylus catalogue (Renishaw part number H-1000-3200) for further information.

Extension bars and adaptors

Probe reach may be extended, with minimal loss of accuracy using probe extension bars. These are available in M8 - M8 or autojoint - M8 connector versions according to the type of probe head in use.

See the ‘Probing systems for coordinate measuring machines' catalogue (Renishaw part number H-1000-5050) for details.

www.admt.kr

042-482-0621 / master@admt.kr

문의 사항은 www.admt.kr 로 연락 부탁 드리겠습니다.

Part number summary

Probes

Description	Part number
TP200 probe body	A-1207-0020
TP200B probe body	A-1207-0056

Probe kits

Description	Part number
TP200 probe kit 1 (including standard force module)	A-1207-0001*
TP200 probe kit 2 (including low force module)	A-1207-0002*
TP200B probe kit 1 (including standard force module)	A-1207-0055*
TP200B probe body only	A-1207-0056

TP200 stylus modules

Description	Part number
TP200 standard force stylus module	A-1207-0010
TP200 low force stylus module	A-1207-0011
TP200 extended overtravel stylus module	A-1207-0012

PI 200-3 probe interface

Description	Part number
PI 200-3 probe interface for TP1, TP2, TP6, TP20 and TP200	A-5707-0100

SCR200 stylus changing rack

Description	Part number
SCR200 kit- active six port change rack for use with TP200 (including 3 × standard force stylus modules)	A-1207-0030#
SCR200 kit - active six port change rack for use with TP200 (including 3 × low force stylus modules)	A-1207-0070#
SCR200 only	A-1207-0260

042-482-0621 / master@admt.kr

문의 사항은 www.admt.kr 로 연락 부탁 드리겠습니다.

TP200 accessories

Description	Part number
M12 location piece (re: SCR200)	M-1371-0298
PL63 (5 m) SCR200 to PI 200-3 cable	A-1016-7630
PL64 (10 m) SCR200 to PI 200-3 cable	A-1016-7631
PL65 (20 m) SCR200 to PI 200-3 cable	A-1016-7632
PL97 (0.26 m) dual adaptor cable for connecting 2 × SCR200 racks to PI 200-3 (requires 2 × cables PL63 / PL64 / PL65) in addition	A-1016-7660

Replacements

Description	Part number
CK200 cleaning material	A-1085-0016
S1 'C' spanner	A-1042-1486
S9 double ended 'C' spanner	A-1047-3932
S7 stylus tool	M-5000-3540
Hexagon key 1.5 mm AF	P-TL03-0150

* TP200 / TP200B probe kit contents:

- TP200 probe body
- Stylus module
- Tools / cleaning kit
- Test certificate
- User's guide

SCR200 stylus change rack kit contents:

- SCR200 rack
- Stylus modules (×3)
- Mounting kit
- Datuming stylus

www.admt.kr

042-482-0621 / master@admt.kr

문의 사항은 www.admt.kr 로 연락 부탁 드리겠습니다.

Renishaw plc
New Mills, Wotton-under-Edge
Gloucestershire, GL12 8JR
United Kingdom

T +44 (0)1453 524524
F +44 (0)1453 524901

www.renishaw.com/cmmsupport

RENISHAW
apply innovation™

www.admt.kr

For worldwide contact details, please visit our main website at www.renishaw.com/contact

Issued 03 2026

042-482-0621 / master@admt.kr